GBC TOWER

Great Ball Contraption Tower

II

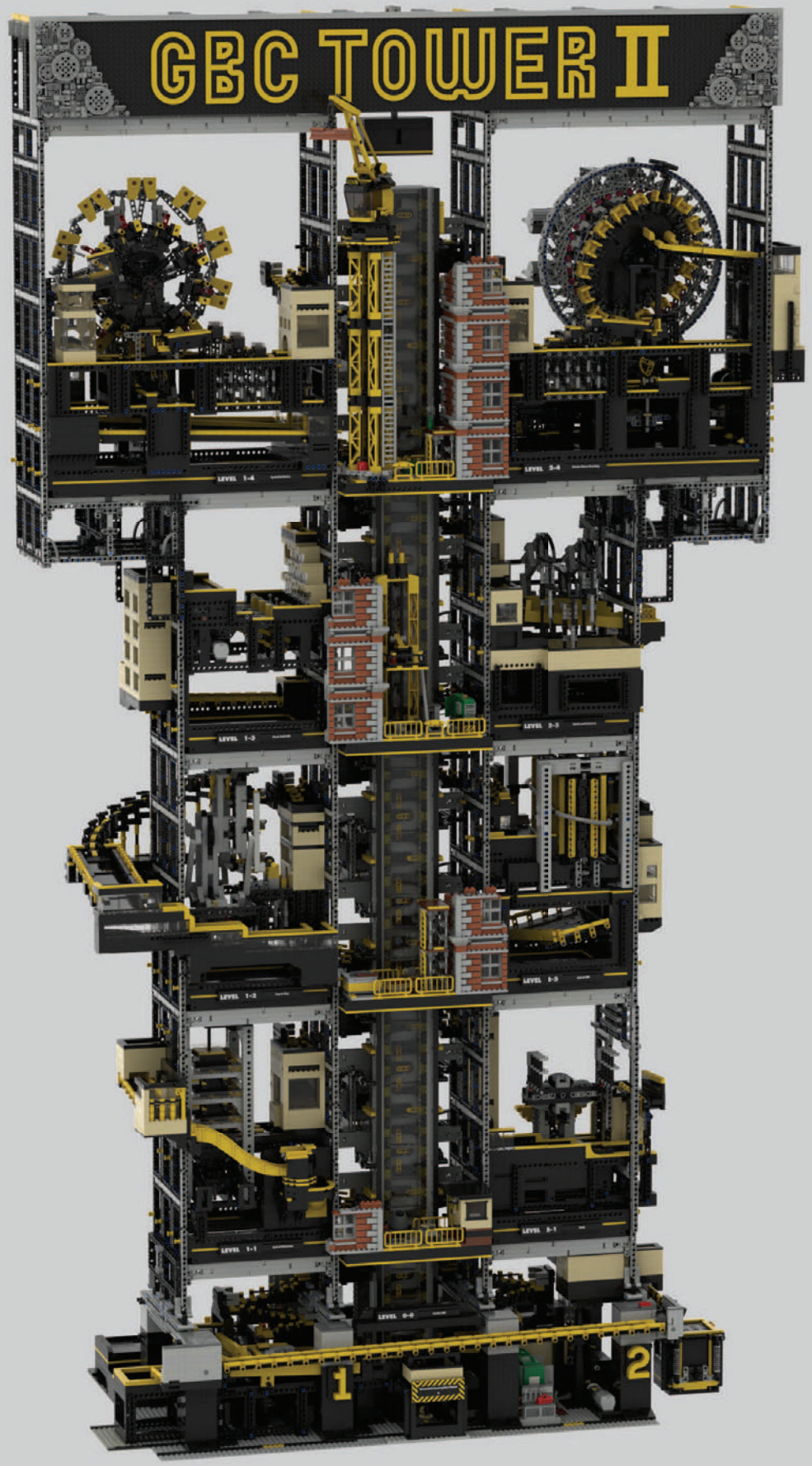

Great Ball Contraption Tower II

The Great Ball Contraption Tower II is the larger sequel to the original GBC Tower from 2019. The tower uses eight Akiyuki modules distributed vertically across two parallel 7-foot structural frames. The tower also uses several additional modules and techniques from many GBC builders from across the globe – an homage to the creativity of the GBC community. The result is a giant MOC with more than 45,000 LEGO® bricks!

The Modules

The base of the tower features two modules, the primary *snake lift*, inspired by FernandoQ, takes balls from the base floor to a height of 72 inches and the secondary *marble run lift*, inspired by JK Brickworks, moves balls toward the exit ramp. The snake lift delivers the balls to a *splitter ramp*, inspired by Matt Norman, which feeds balls to both the right and left sides of the tower. The fourth floor of the tower has the first two Akiyuki modules, the dazzling *cycloidal drive module* (featured in GBC Tower I), and the torque hungry *strain wave gearing module*. The third floor houses, a trustworthy *stuck ball lift module* on the left and the fan favorite *catch and release module* (featured in GBC Tower I) on the right. The second floor showcases the rhythmic *cup-to-cup module* on the left and the reliable *spiral lift module* on the right. Finally, on the first floor, a *spiral staircase module* (featured in GBC Tower I) on the left side while a *fork module* resides on the right side. It takes balls roughly 3:00 minutes to go through each side, traveling a combined distance of about 65 ft.

Hardware and Software

The modules are driven by a whopping 17 Power Function motors (10 XL and 7 M) powered from two DACTA Control Lab Serial Interface B bricks. In addition, the tower uses an extra medium motor and two servo motors to engage 'by-pass mode' enabling balls to keep flowing through the base of the tower while shutting down the primary modules for maintenance. The two DACTA Control Lab Serial Interface B bricks are driven by a Raspberry Pi computer attached to a high resolution 5.5 inch AMOLED touch screen. The motors' speeds are managed using the Control Lab IO software written for the GBC Tower II.

These instructions outline the final 168 steps connecting 50 modules and components into the full GBC Tower II. I was happily surprised that several GBC builders, from around the world, built my first GBC Tower. Therefore, I look forward to hopefully see some talented builders taking on the challenge of building GBC Tower II. I personally had a ton of fun pushing the limits of the previous tower into new heights!

For more information about the GBC Tower II visit www.gbctower.com or the following websites from the GBC designers who inspired this build: *Akiyuki Kawaguchi* (akiyuki.jp), *JK Brickworks* (jkbrickworks.com), and *Matt Norman* (greatballpit.com).

Cheers,
Diego Baca

CONTENTS

INTRODUCTION	1
MODULES	3
STEPS	7
COMPONENTS	179
ELECTRONICS	221
PARTS LIST	231

For more information and step-by-step instructions for each of the modules, visit: www.gbctower.com

MODULES

M01

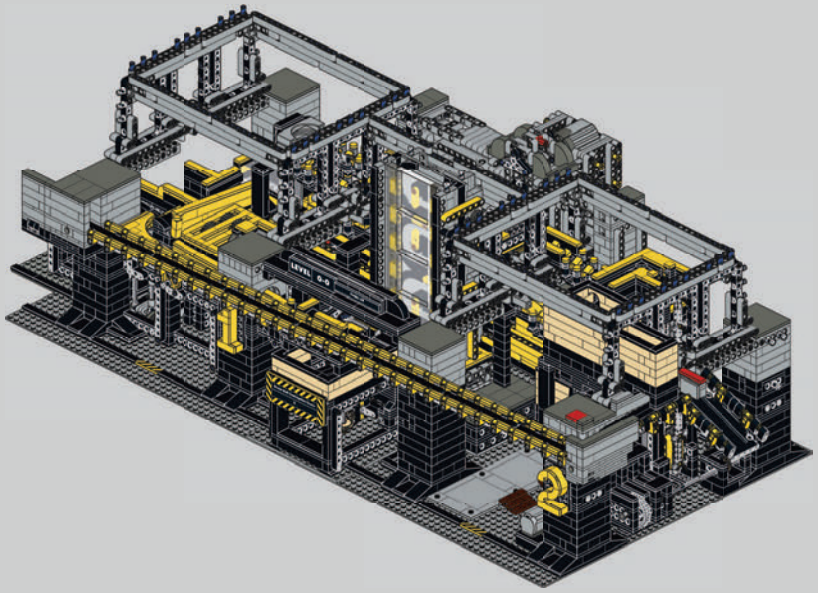

Level 0-0
Snake Lift Base
6,989 pcs

Mechanisms inspired by:
FernandoQ, JK Brickworks, Akiyuki

M08

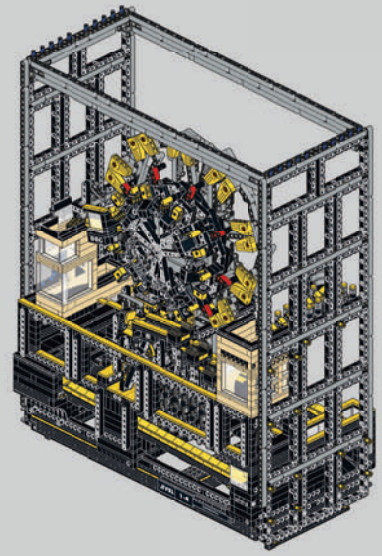

Level 1-4
Cycloidal Drive
4,603 pcs

Mechanisms inspired by: Akiyuki,
JK Brickworks

M09

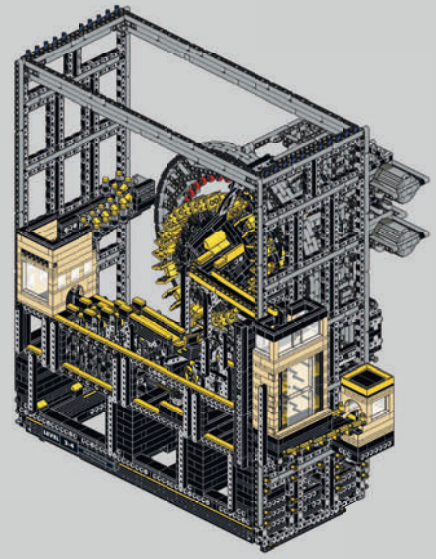

Level 2-4
Strain Wave Gearing
5,715 pcs

Mechanisms inspired by:
Akiyuki, Dunes

M02

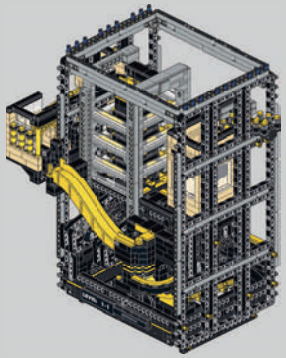

Level 1-1
Spiral Staircase
2,959 pcs

Mechanism inspired by:
Akiyuki

M03

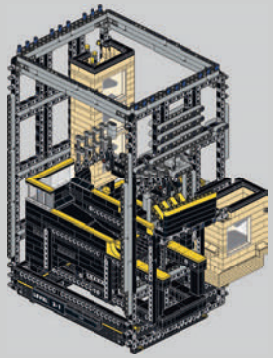

Level 2-1
Fork
2,070 pcs

Mechanism inspired by:
Akiyuki

M04

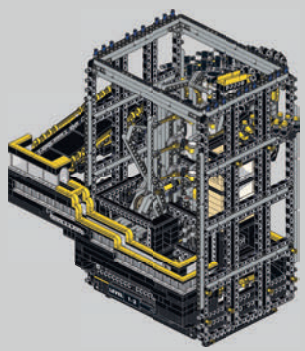

Level 1-2
Cup to Cup
2,670 pcs

Mechanism inspired by:
Akiyuki

M05

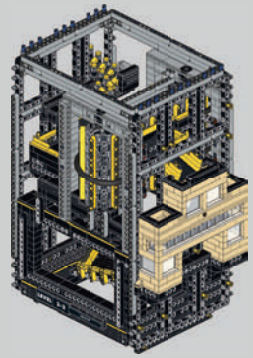

Level 2-2
Spiral Lift
2,654 pcs

Mechanisms inspired by:
Akiyuki, Staffan Ihl

M06

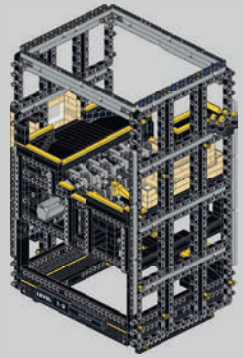

Level 1-3
Stuck Ball Lift
2,147 pcs

Mechanism inspired by:
Akiyuki

M07

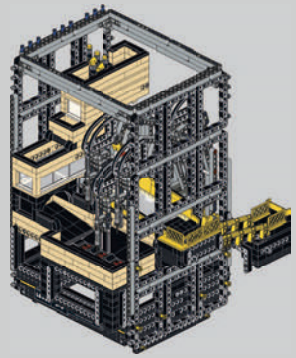

Level 2-3
Catch and Release
2,057 pcs

Mechanism inspired by:
Akiyuki

A 01

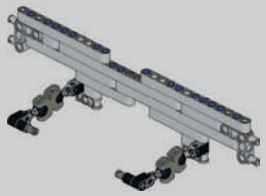

Lift Anchor
52 (16x) = 832 pcs

A 02

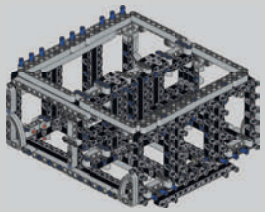

Floor 4 Anchor
446 (2x) = 892 pcs

S 01



Snake Lift
653 (4x) = 2,612 pcs

Mechanism inspired by:
FernandoQ

S 02

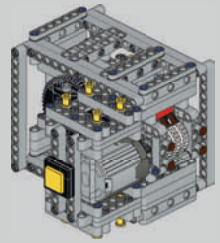

Snake Lift Motor
320 (4x) = 1,280 pcs

S 03

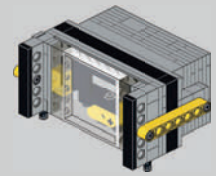

Snake Lift Exit
164 pcs

R 01

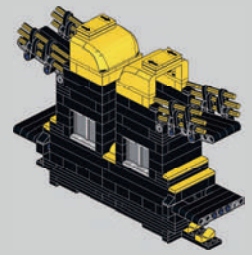

Ramp
310 (4x) = 1,240 pcs

R 02

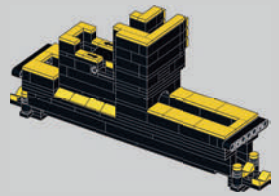

Splitter
233 pcs

Mechanism inspired by:
Matt Norman

T 01

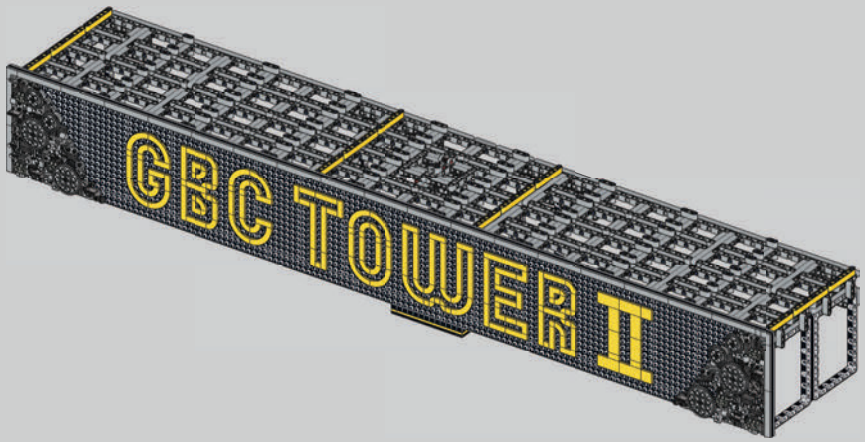

Sign and Mass Damper
1,766 pcs

C 01

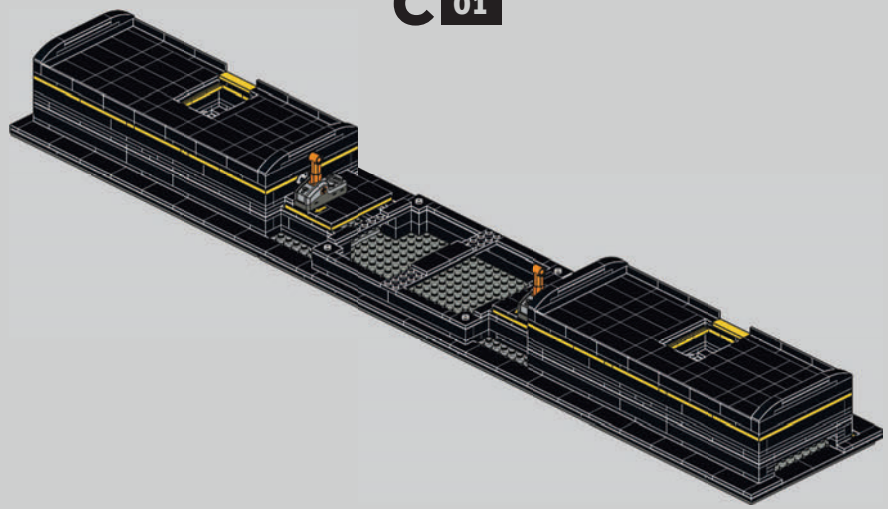

Control Lab Stand
654 pcs

C 02

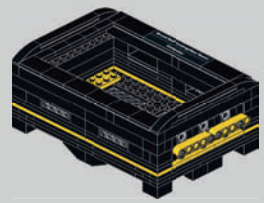

Computer Case
188 pcs

D 01

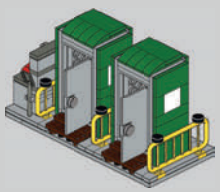

Porta Potty
237 pcs

Model inspired by:
LEGO Set 70811

D 02

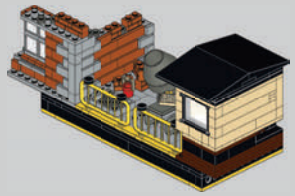

Office
359 pcs

Model inspired by:
LEGO Sets 10197, 5610

D 03

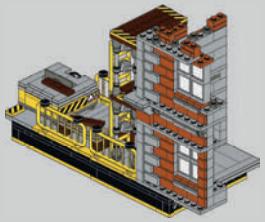

Saw
536 pcs

Model inspired by:
LEGO Set 10197

D 04



Lift
743 pcs

Model inspired by:
LEGO Sets 10197, 7633

D 05

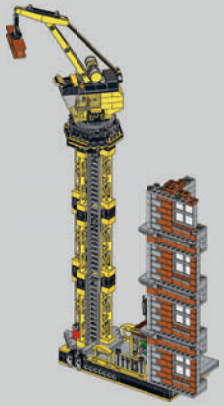

Crane
1,100 pcs

Model inspired by:
LEGO Sets 10197, 7905, 60098

B 01

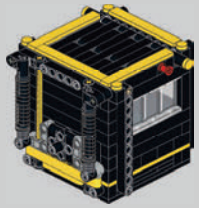

Bin
183 pcs

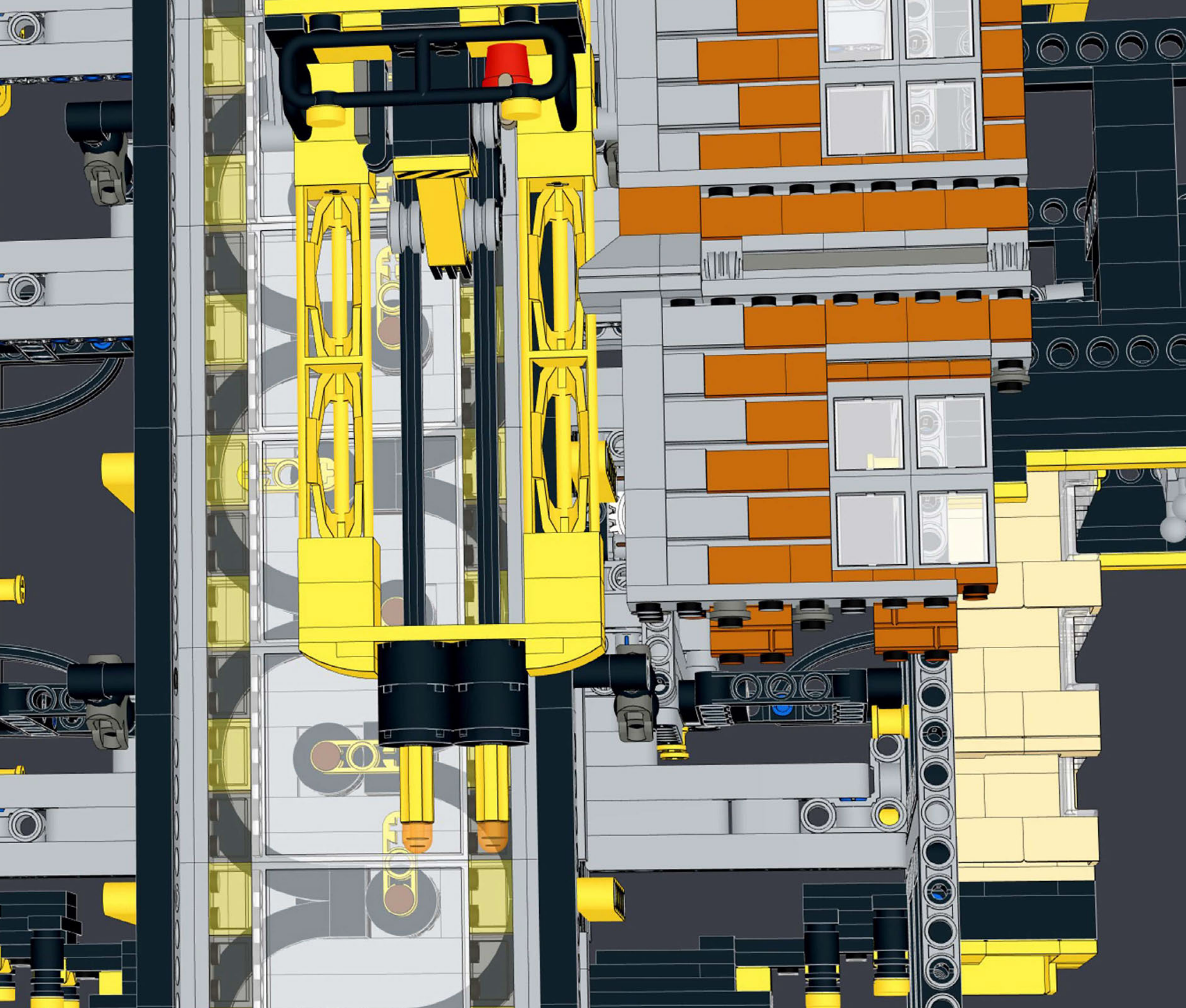

STEPS

001

M
01

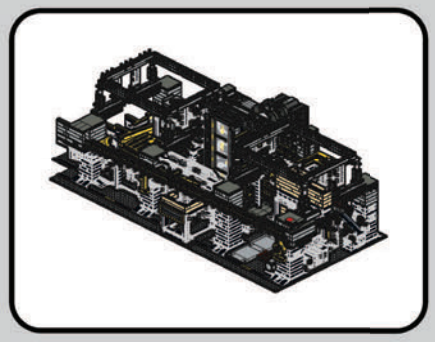

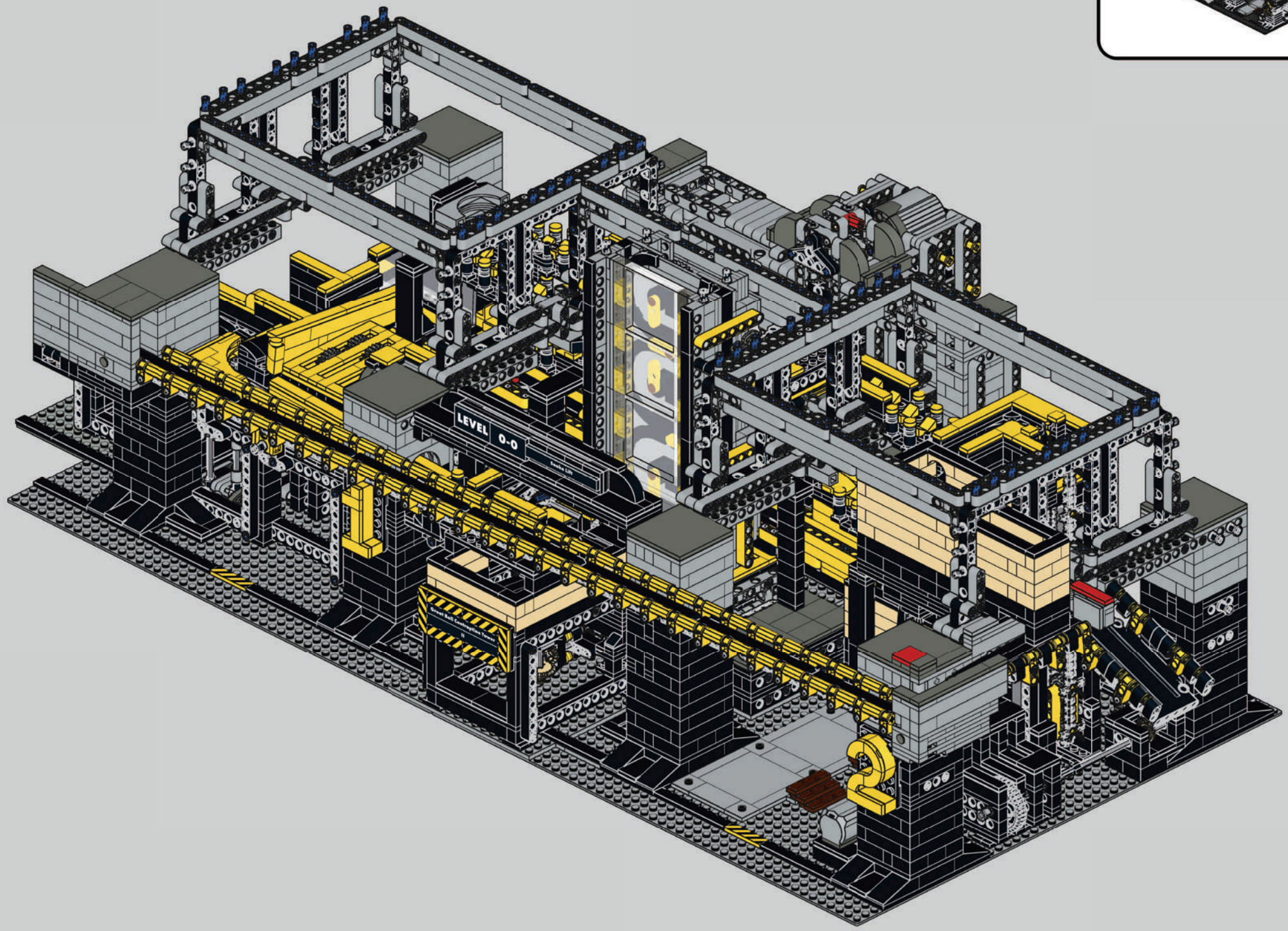

002

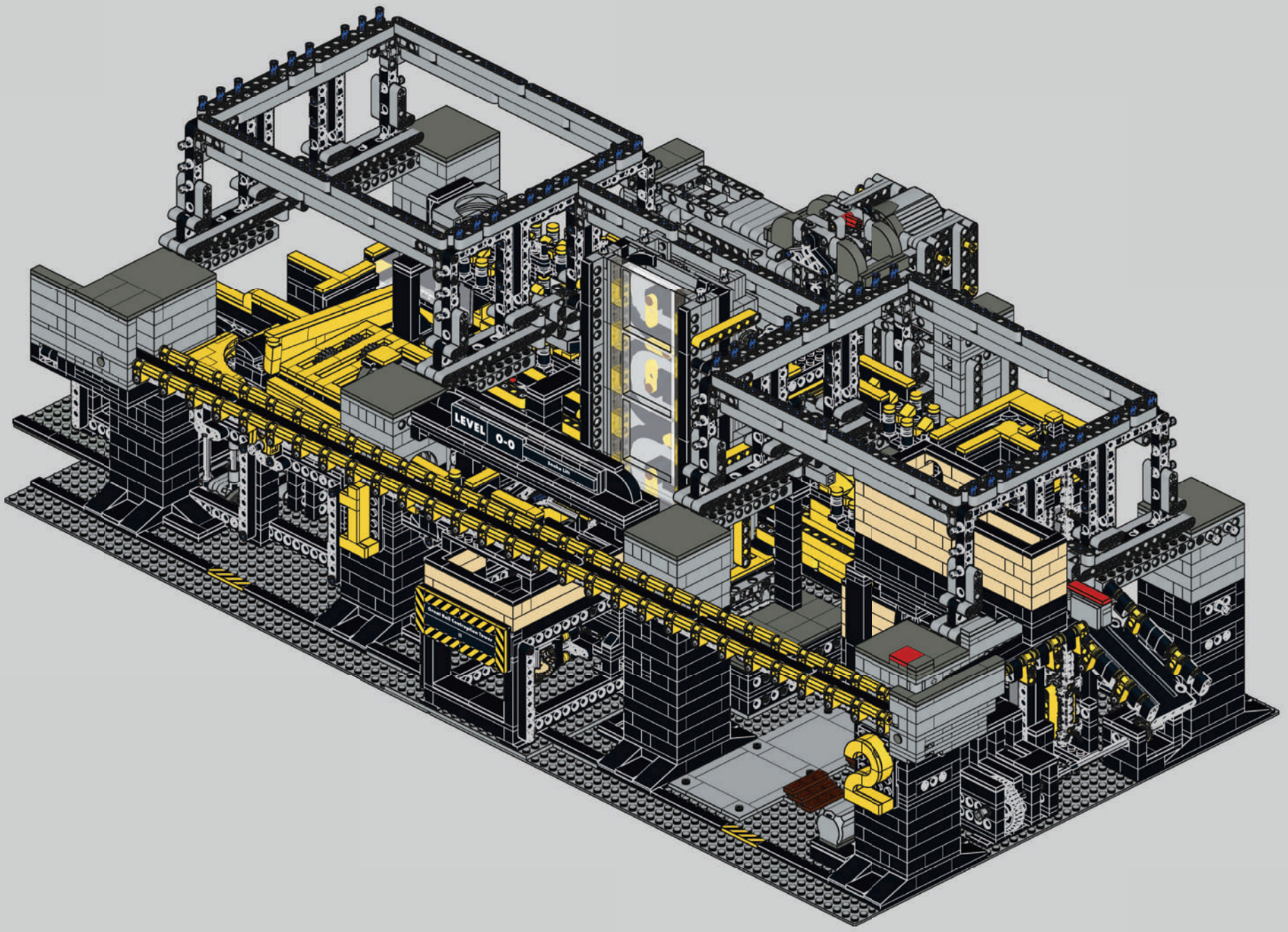

003

C
01

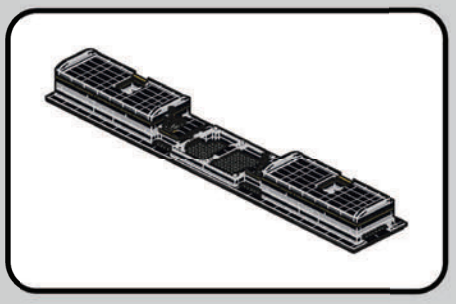

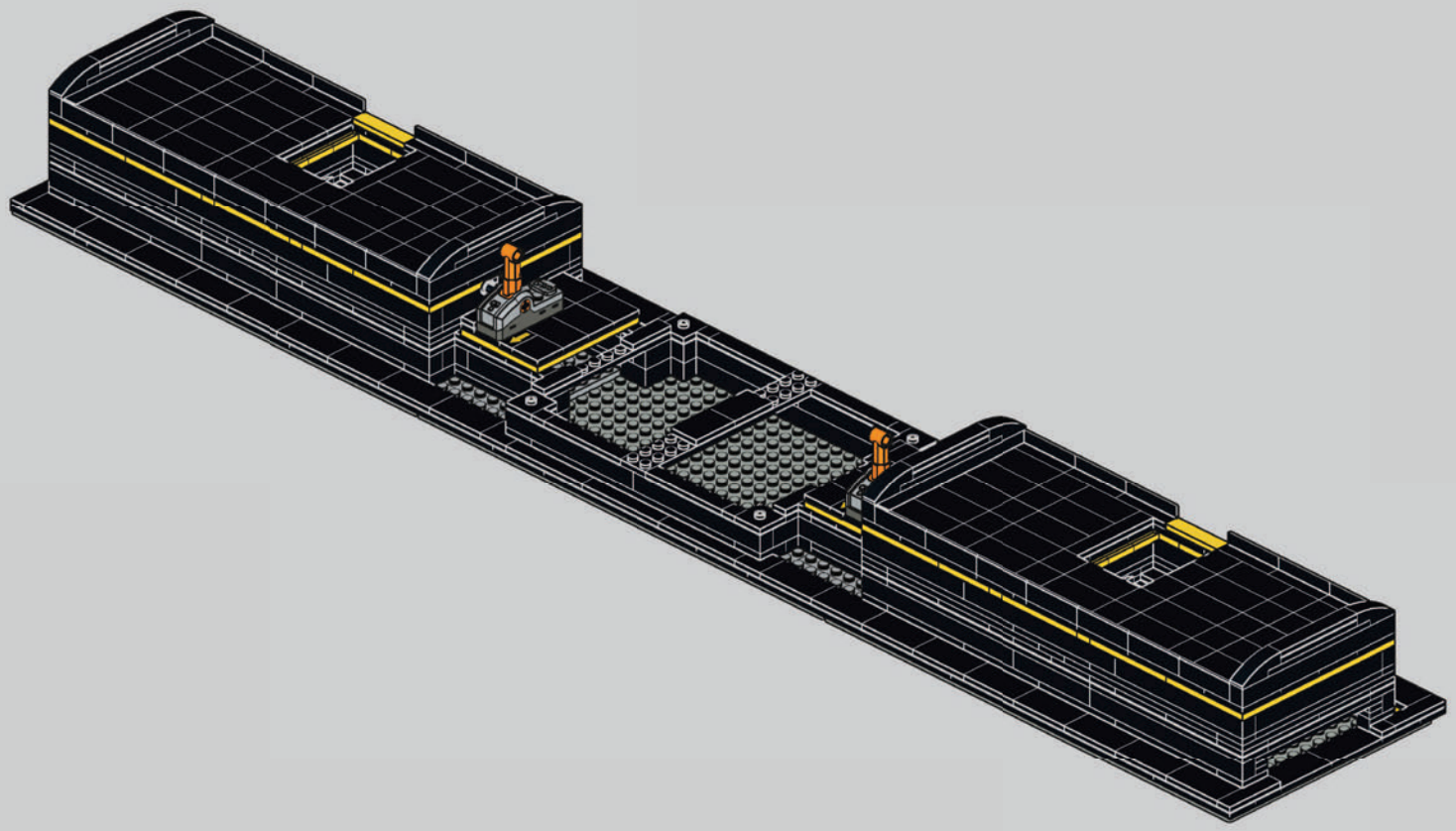

004

C
02

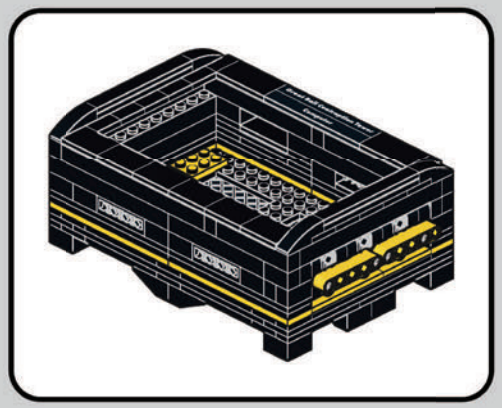

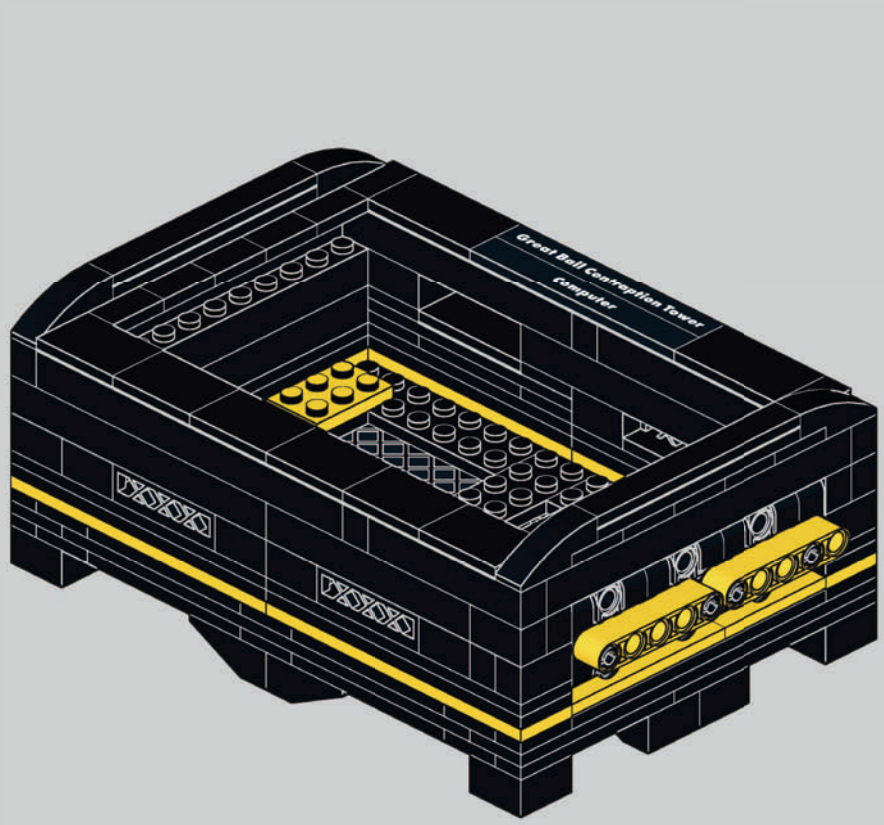

005

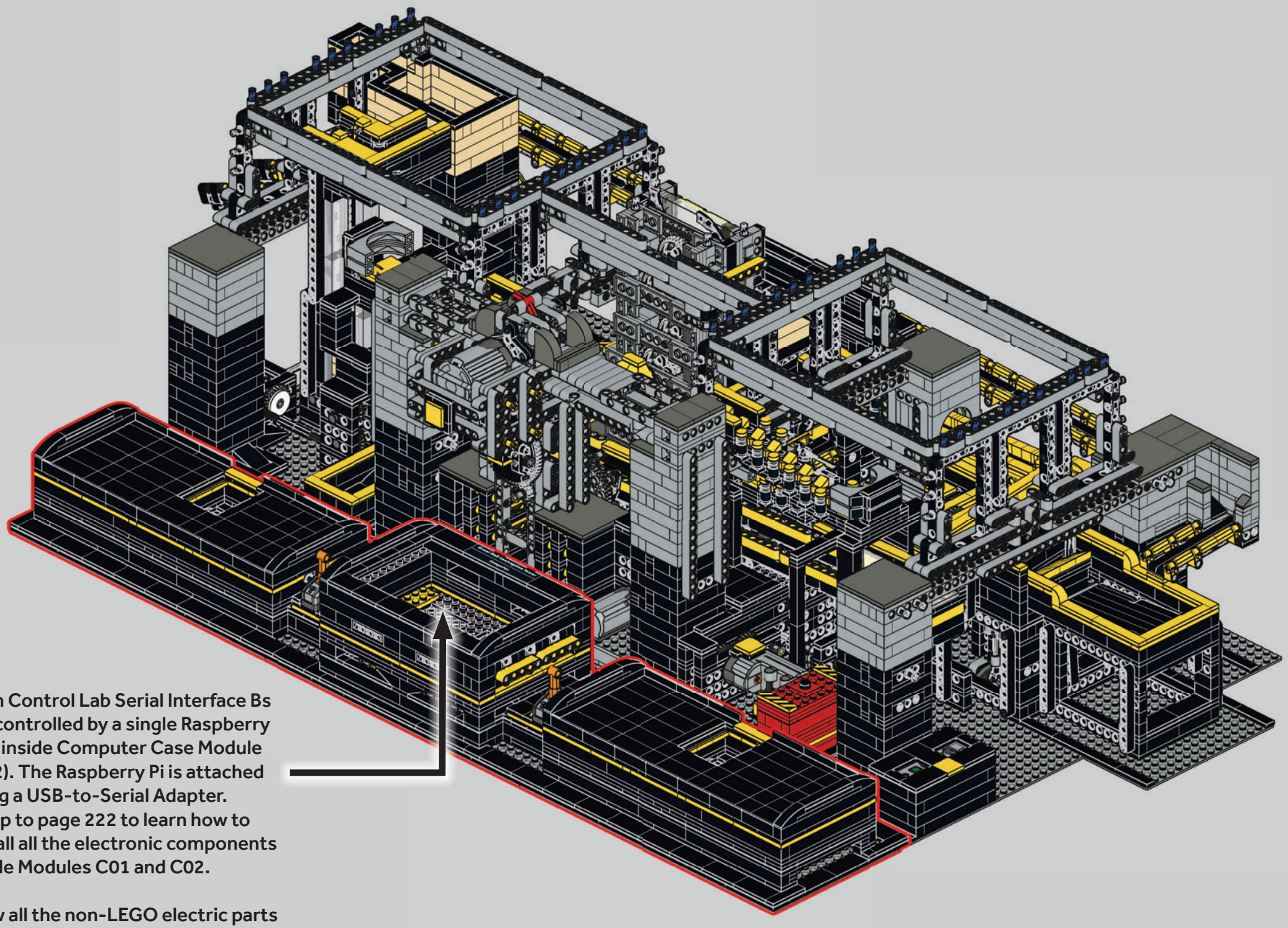

Both Control Lab Serial Interface Bs are controlled by a single Raspberry Pi 4, inside Computer Case Module (C02). The Raspberry Pi is attached using a USB-to-Serial Adapter. Jump to page 222 to learn how to install all the electronic components inside Modules C01 and C02.

View all the non-LEGO electric parts needed for steps 5-8 here:
https://www.amazon.com/hz/wishlist/ls/2L3N4KZ3G1VZS

006

A

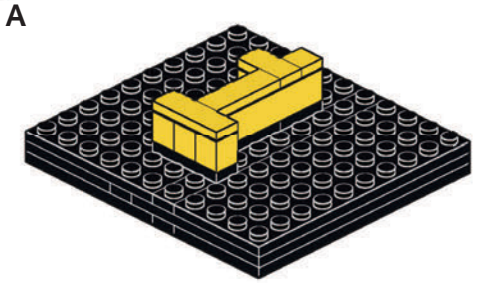

pg. 181

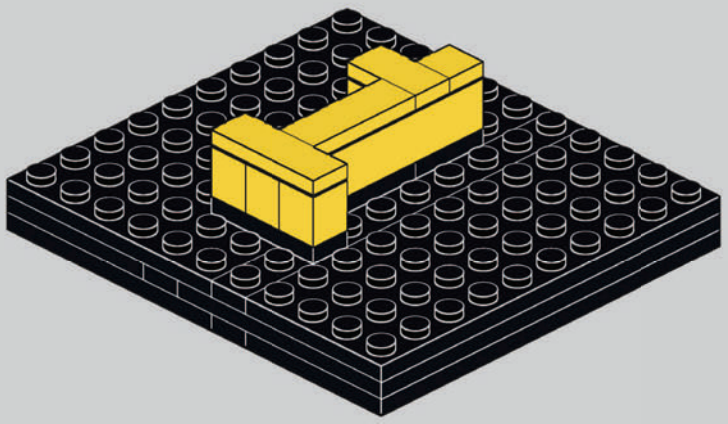

007

B

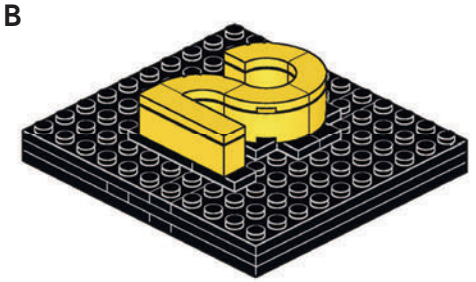

pg. 183

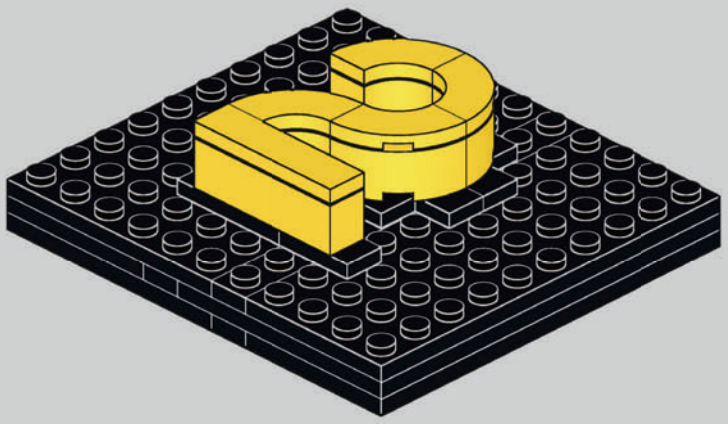

008

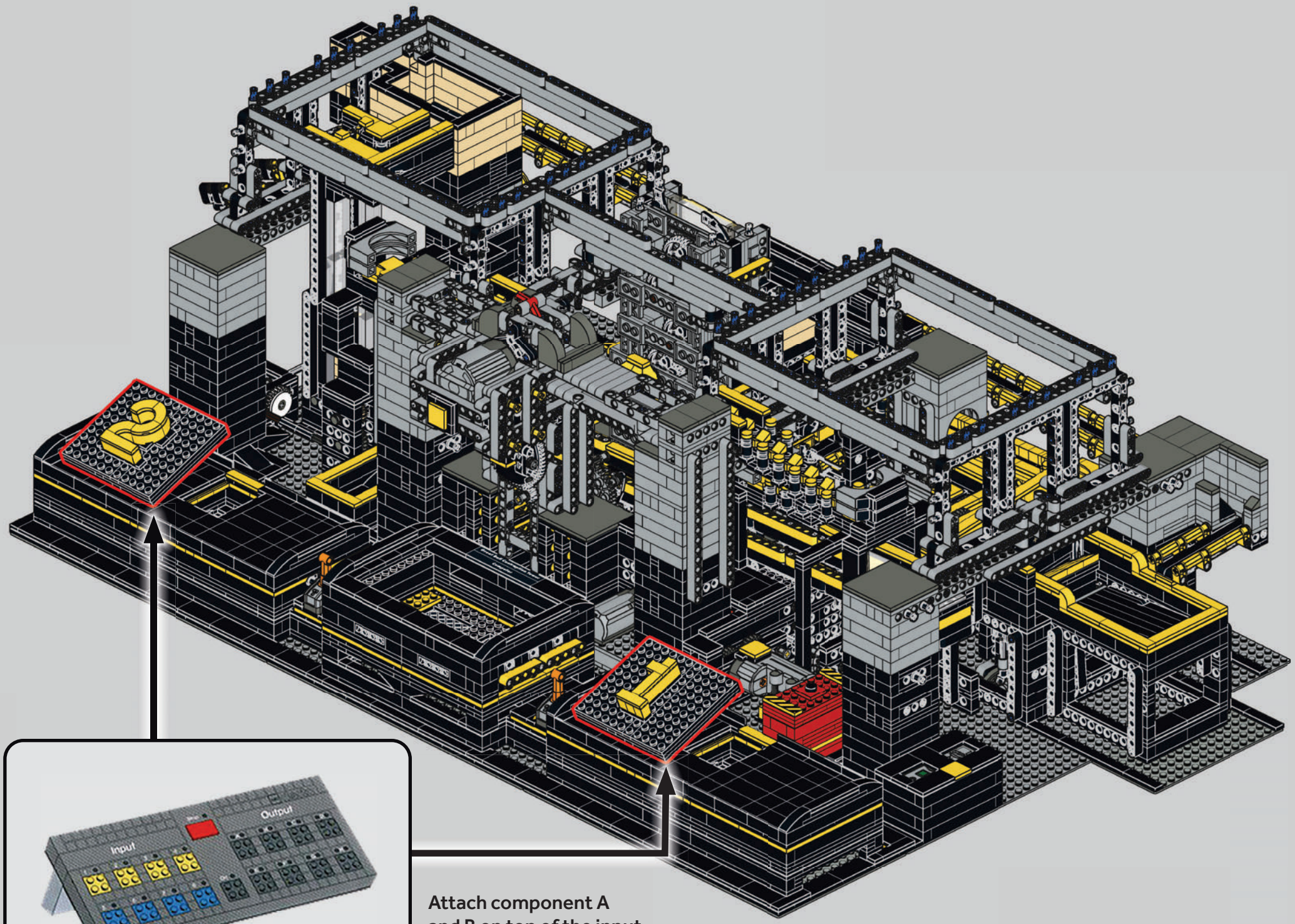

2x

Attach component A and B on top of the input studs of the Control Lab Interface B (2954).

009

D
01

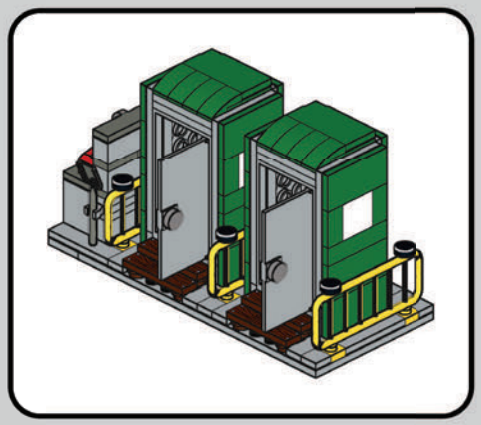

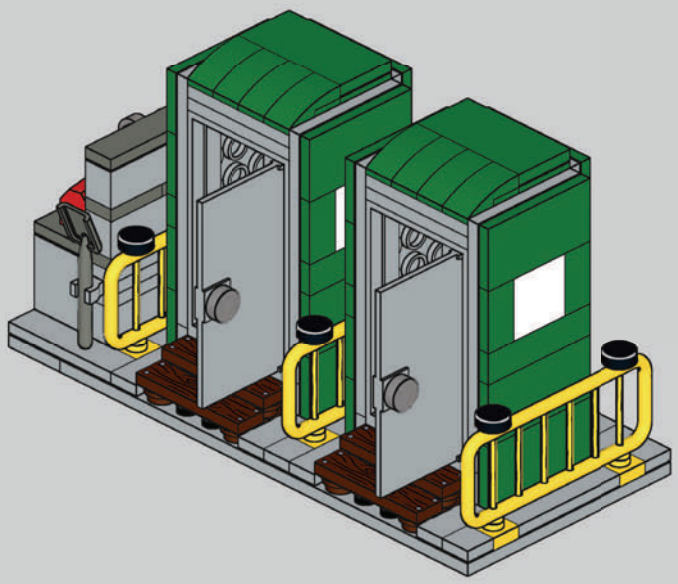

010

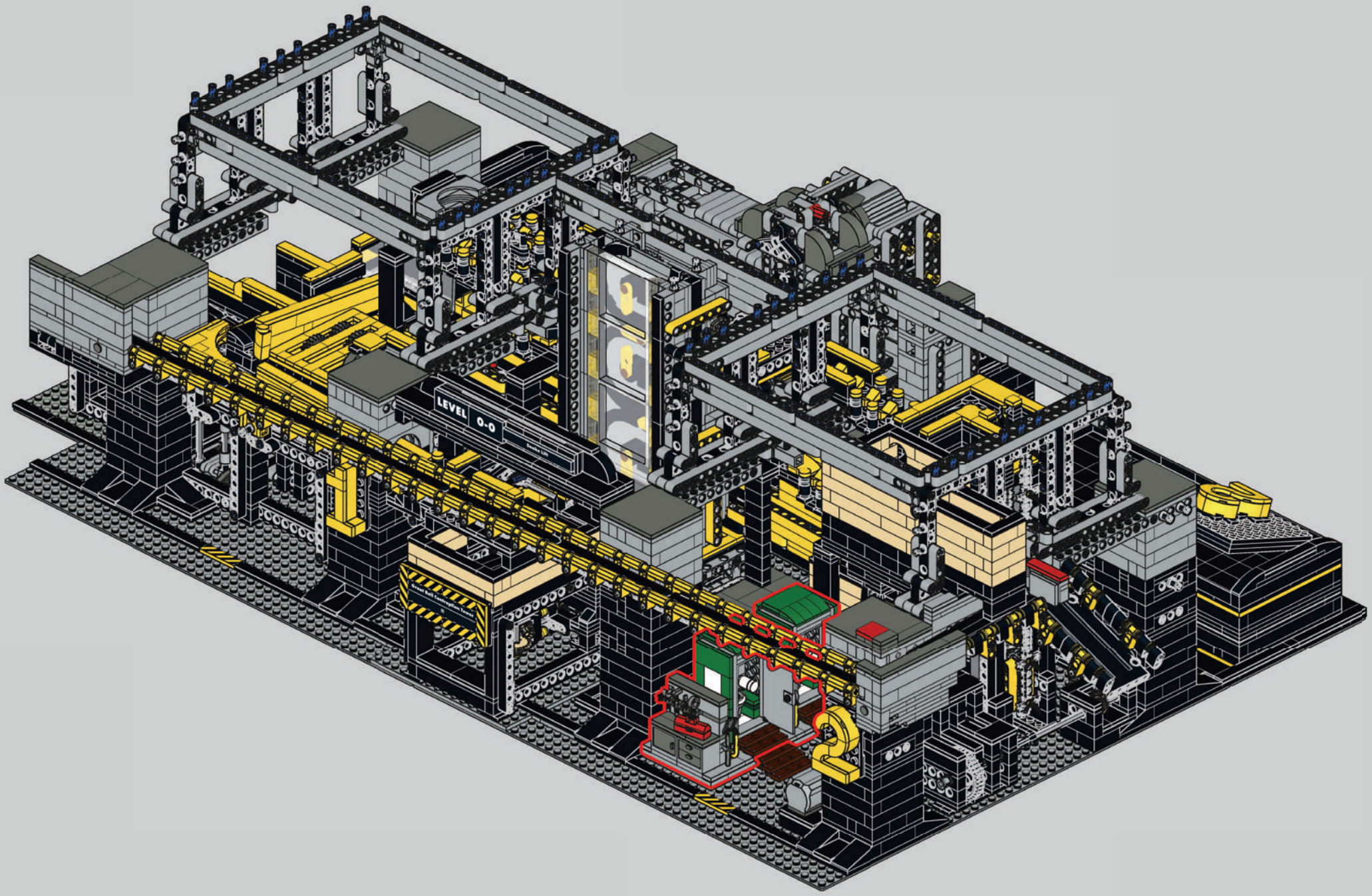

011

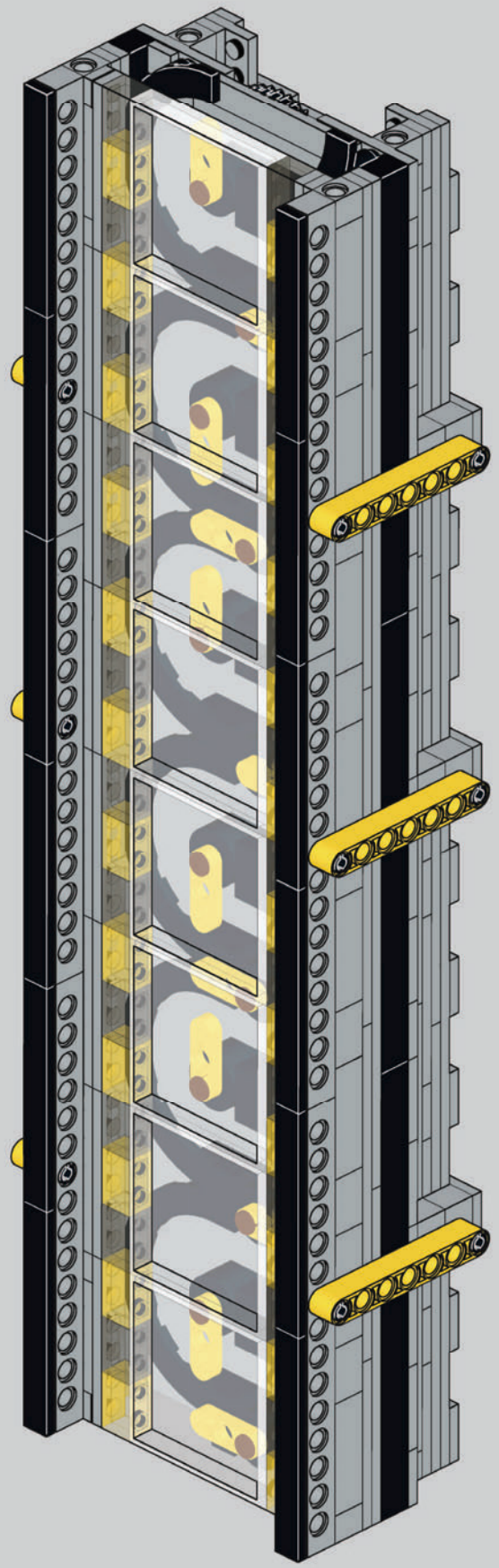

S
01

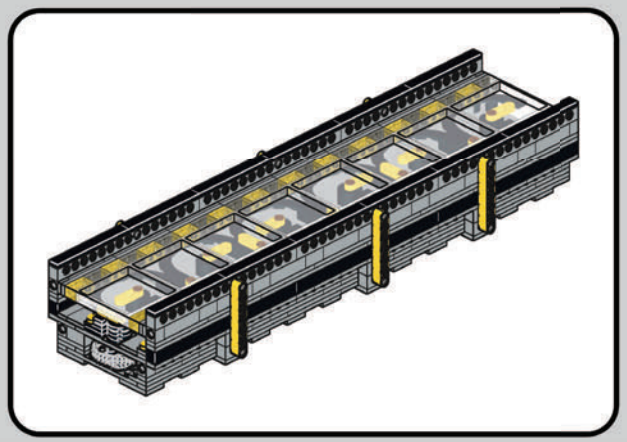

012

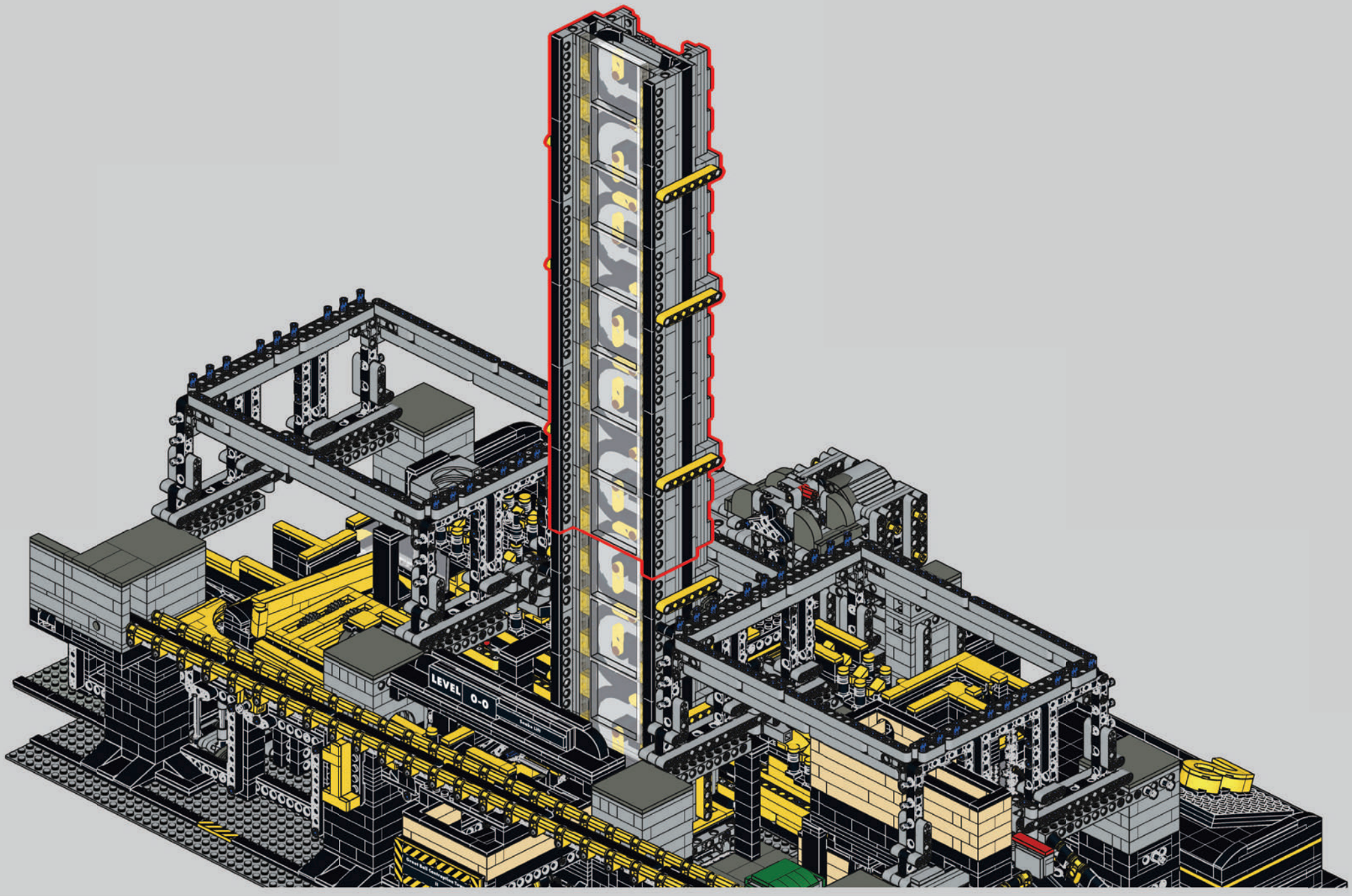

013

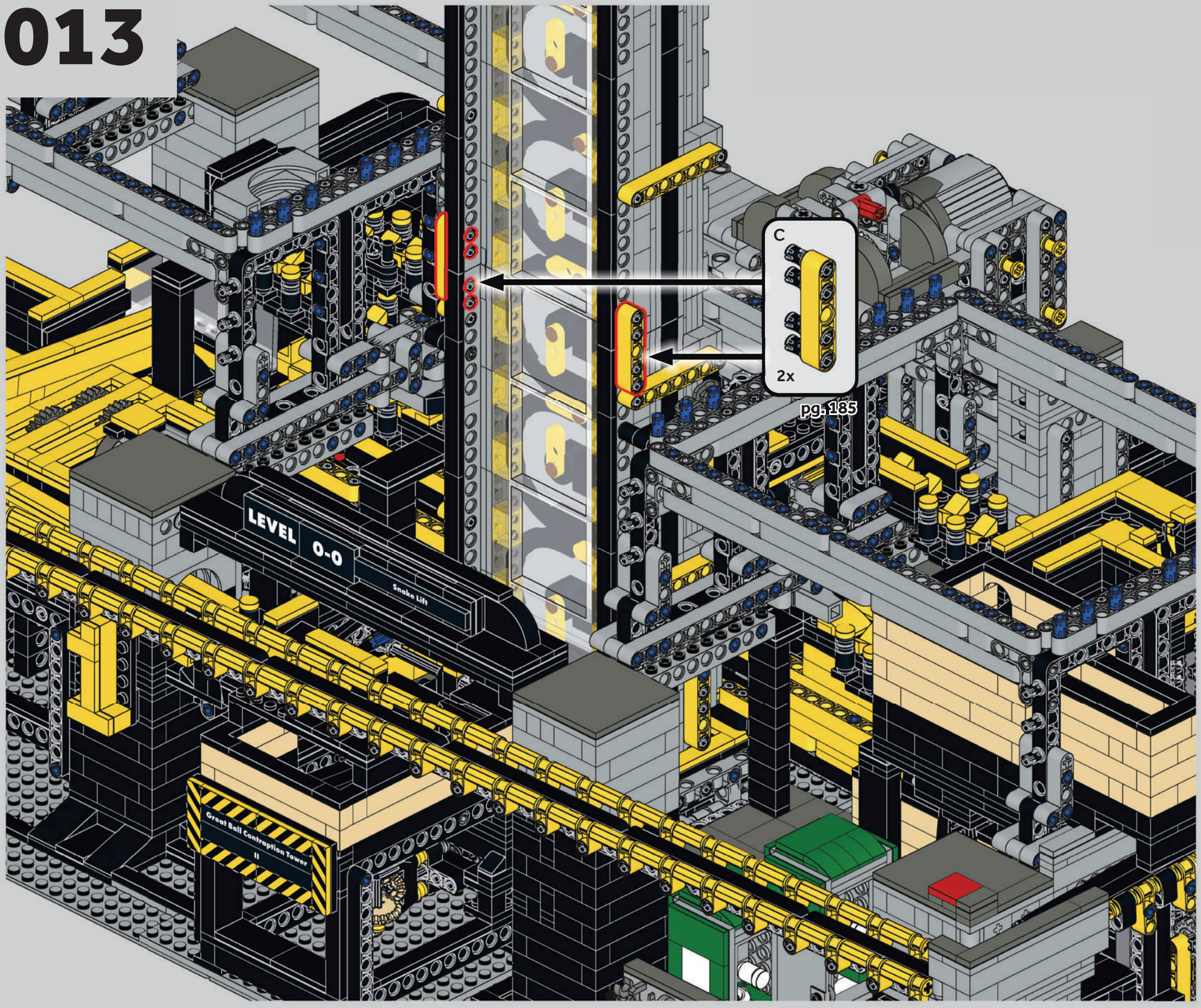
C
2x
pg. 185
LEVEL 0-0
Snake Lift
Great Ball Contraption Tower
II

014

M
02

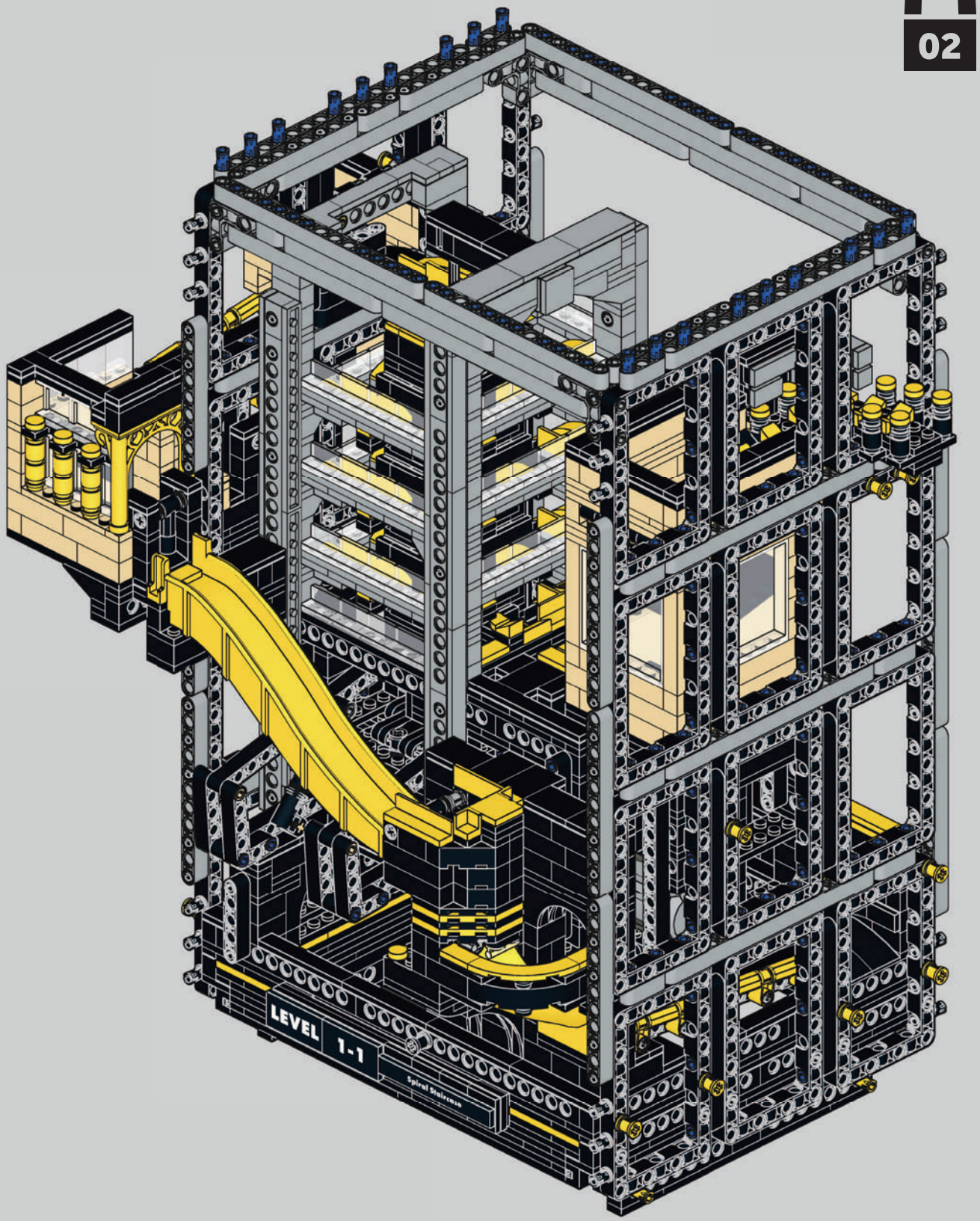

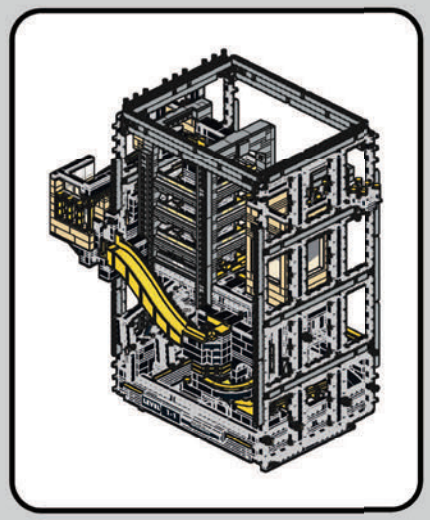

015

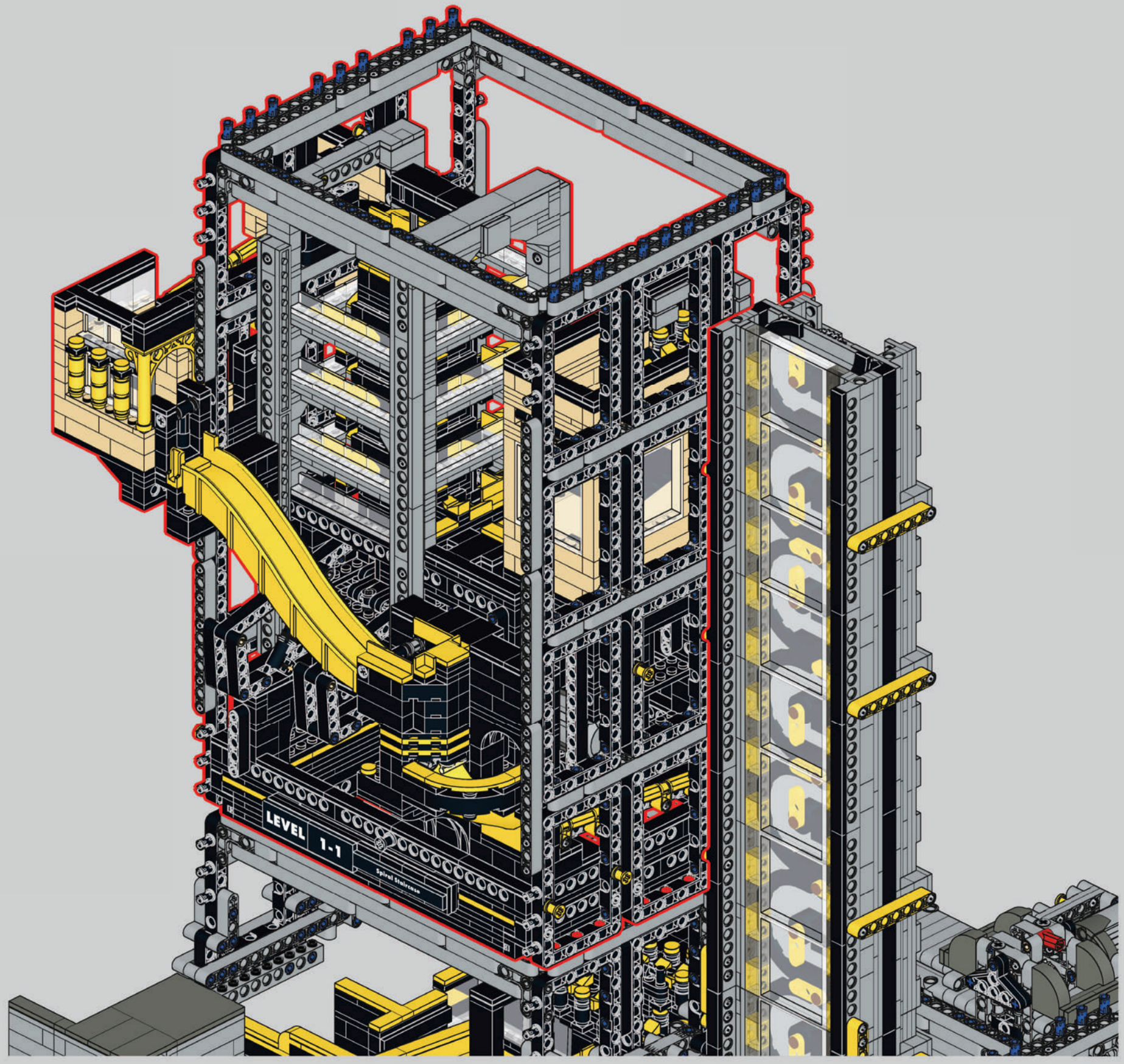

016

M
03

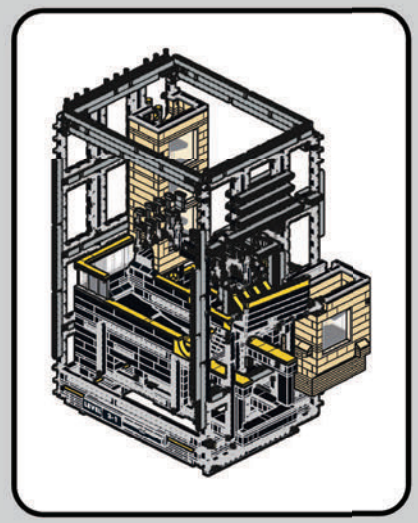

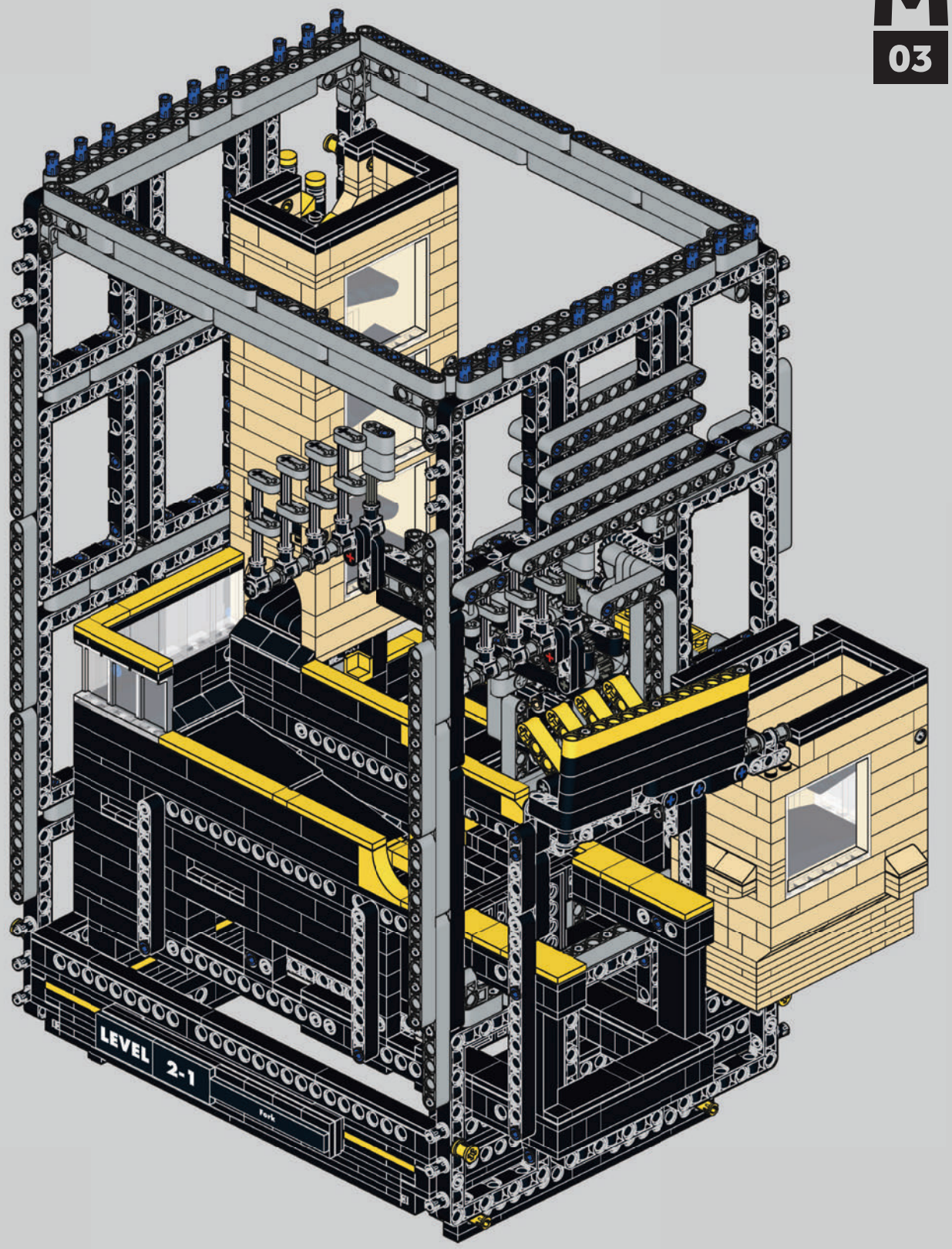

017

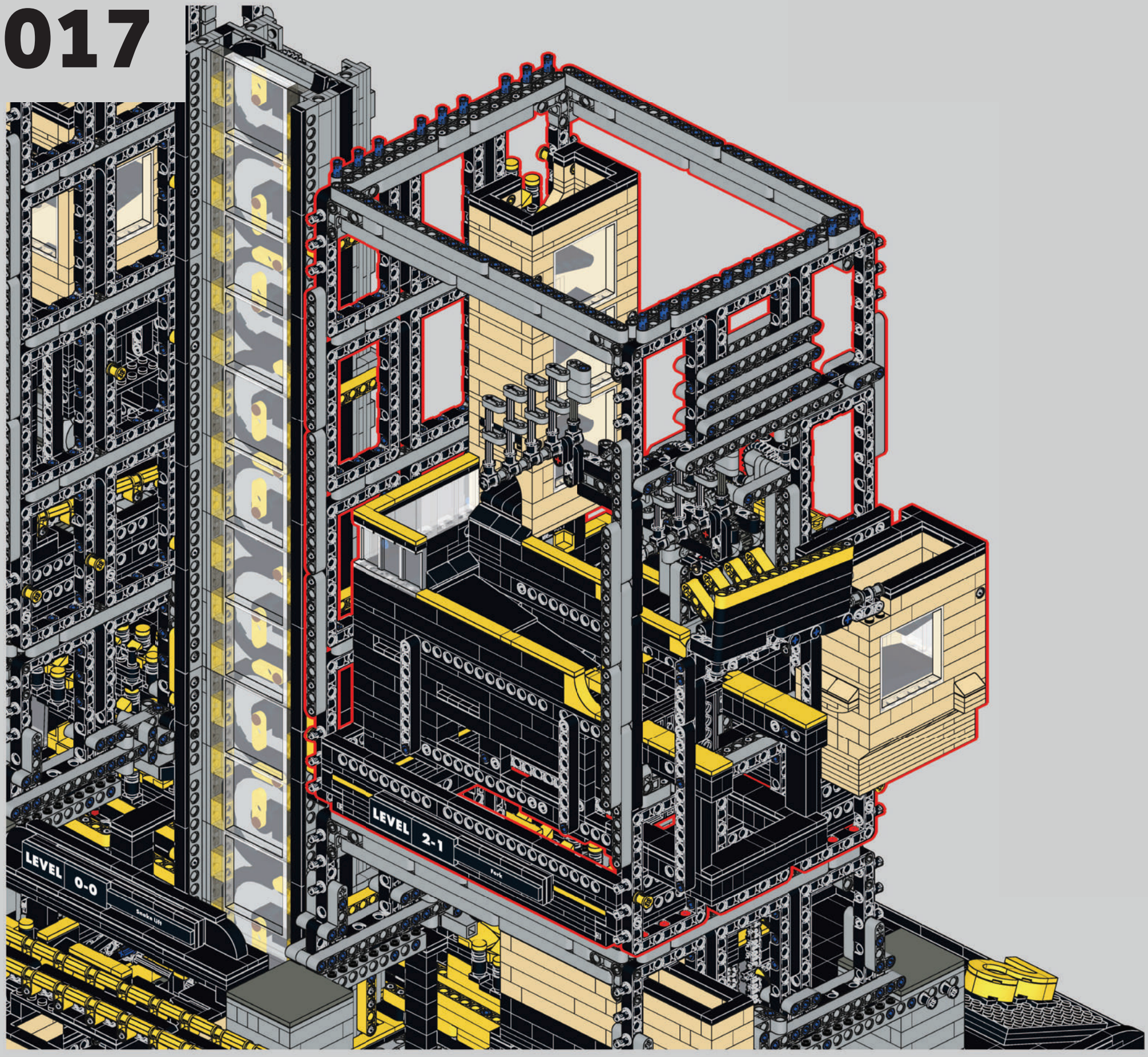

018

A
01

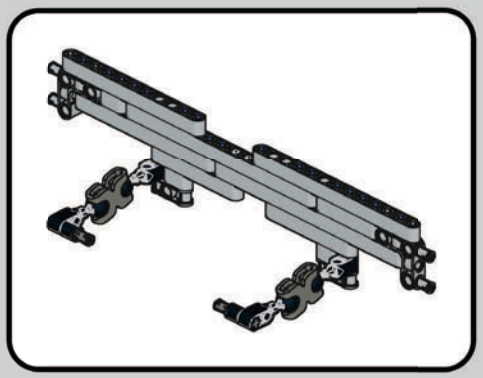

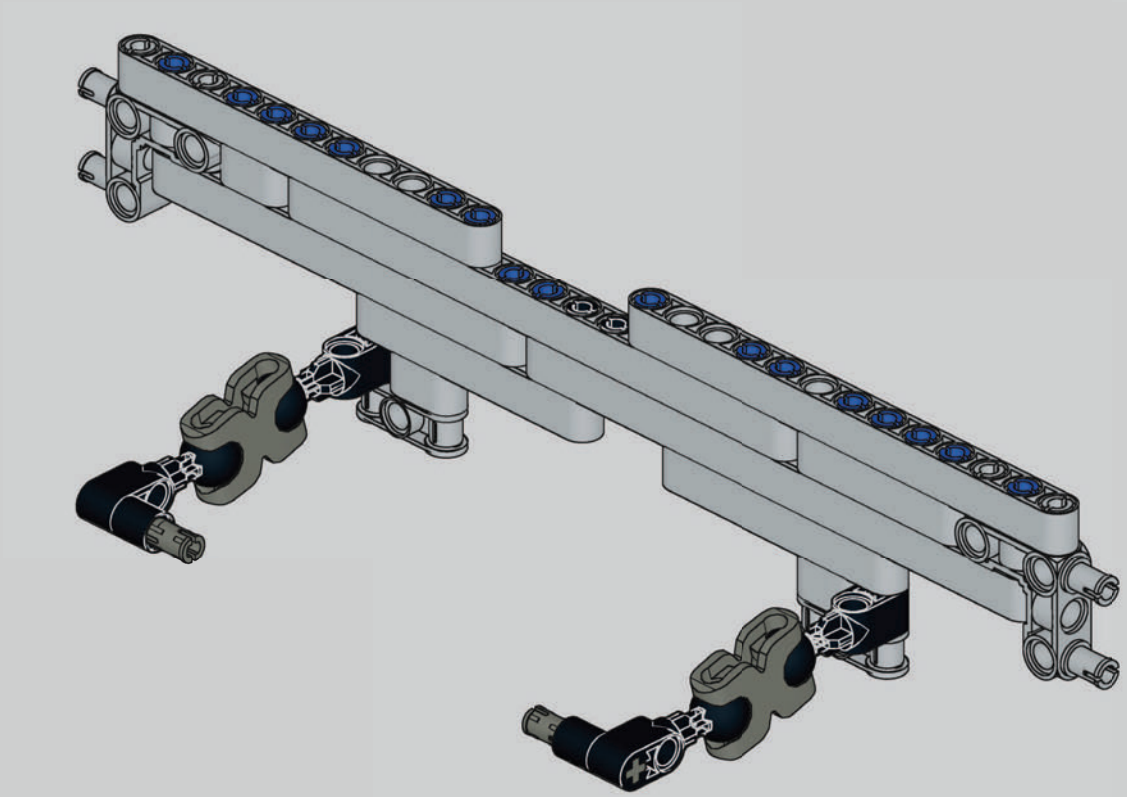

019

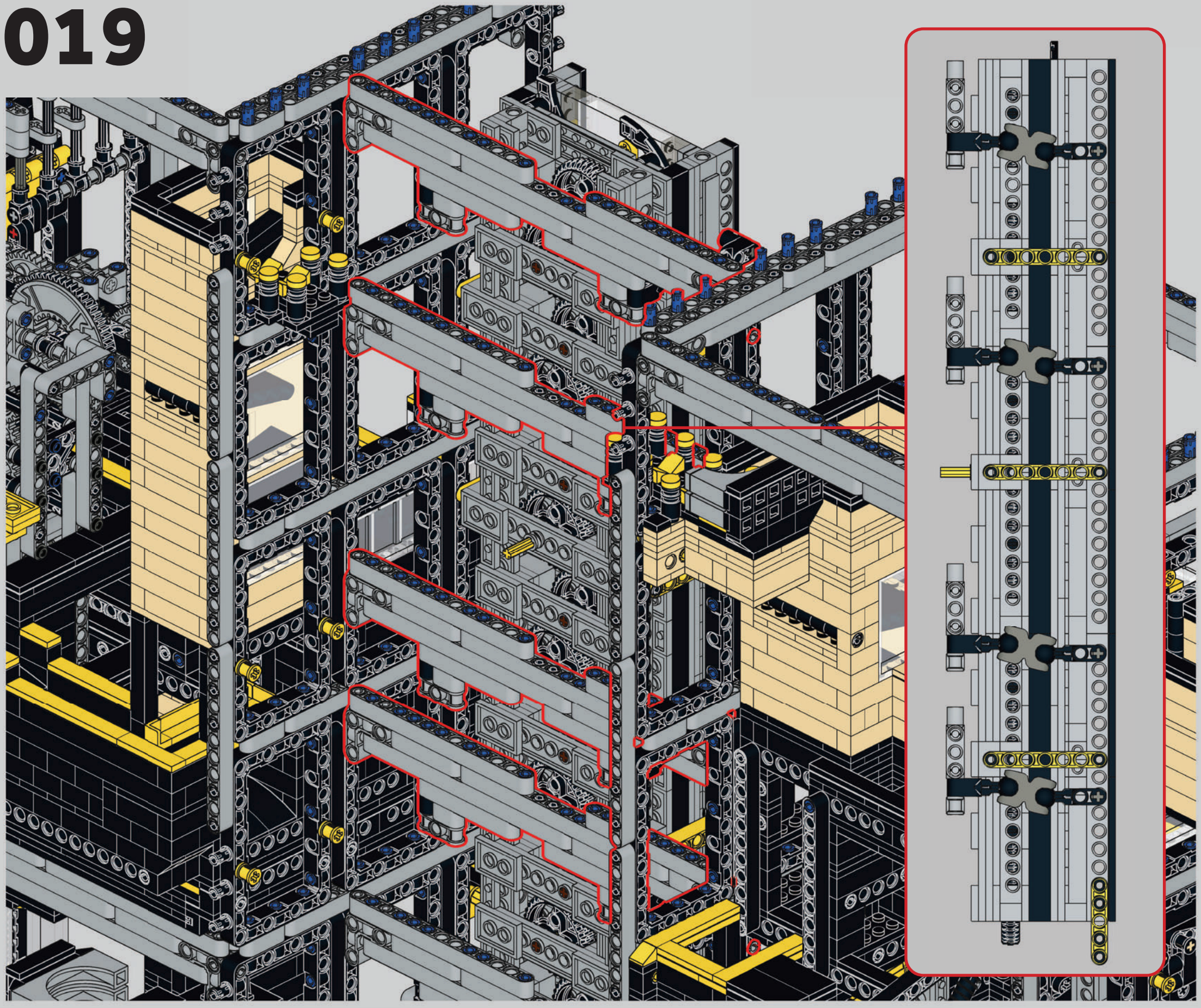

020

R
01

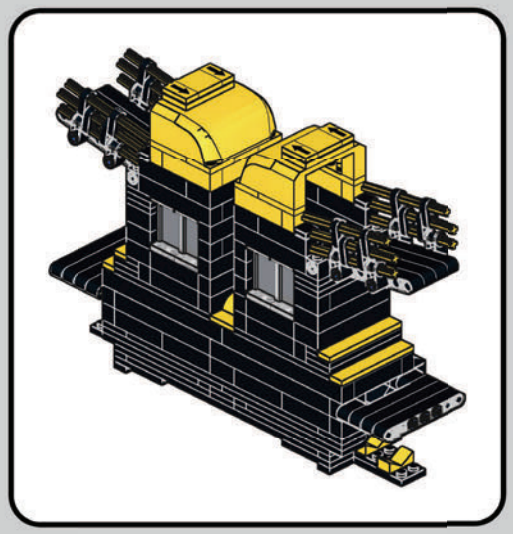

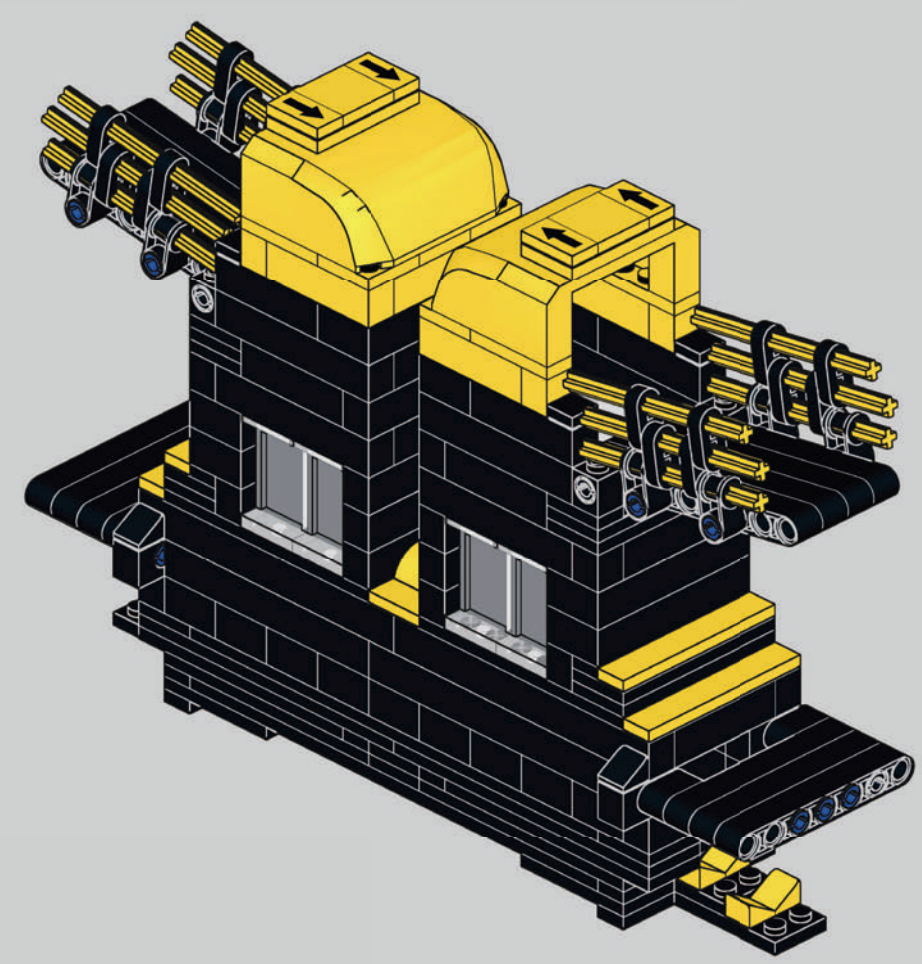

021

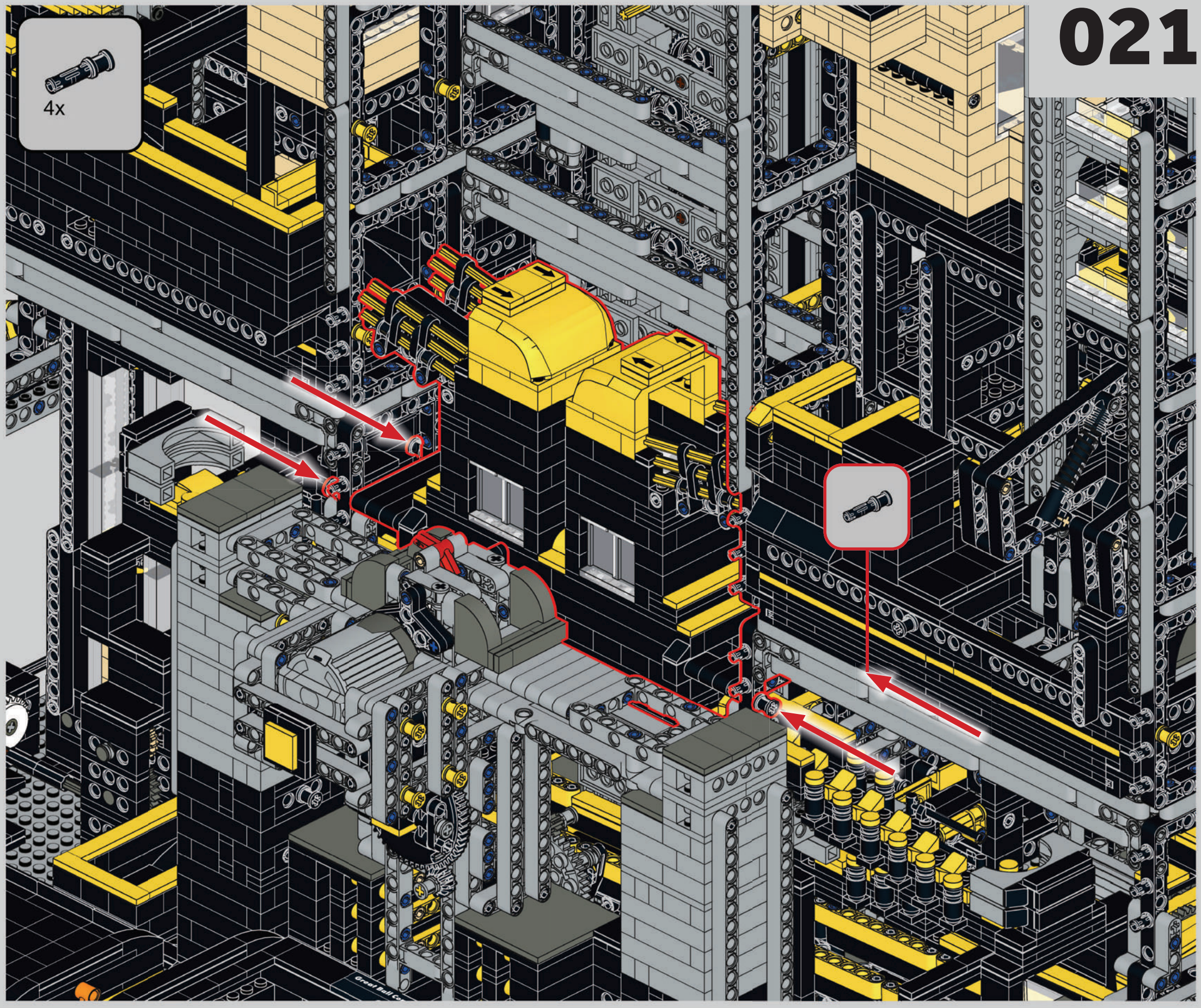

022

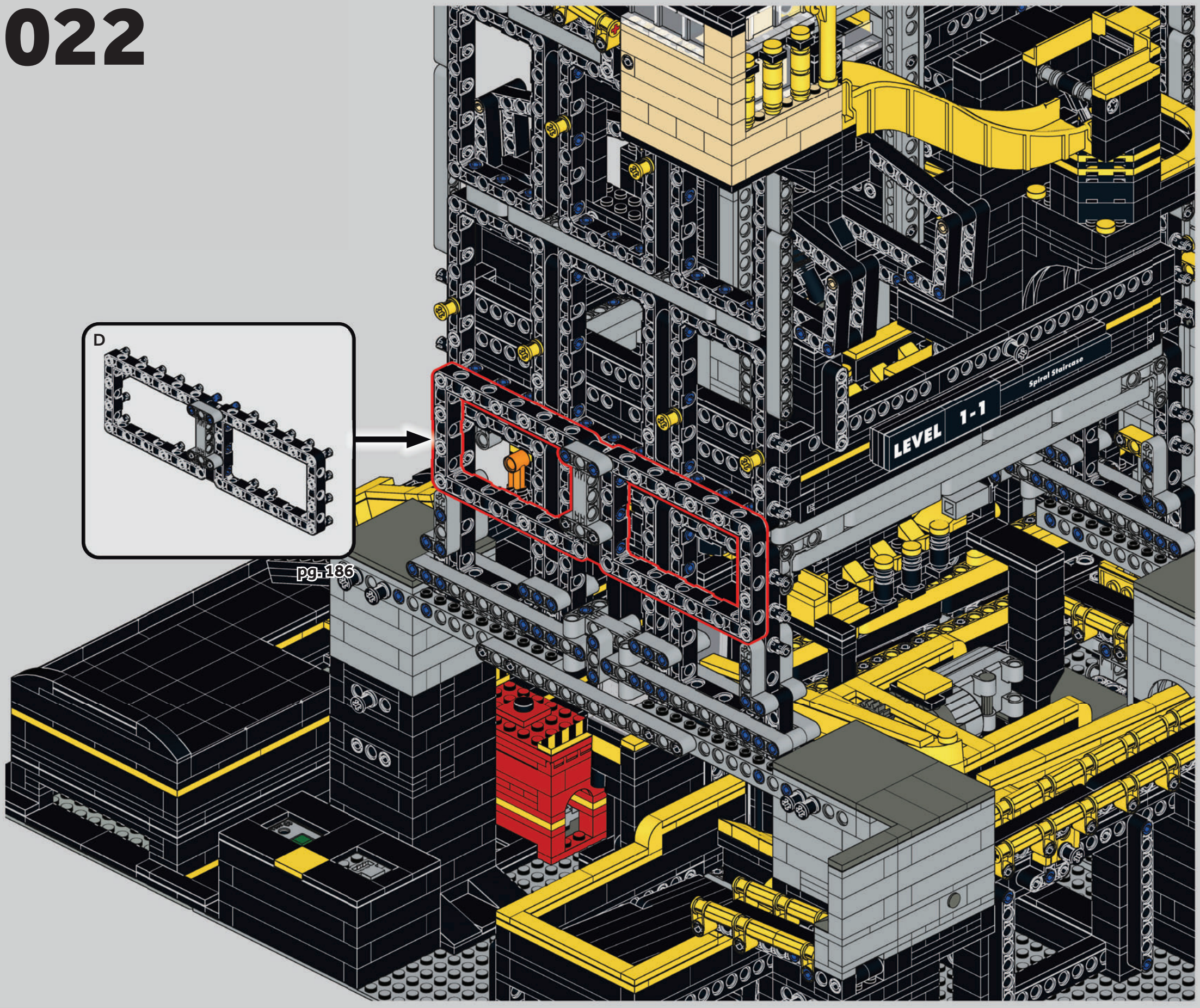

023

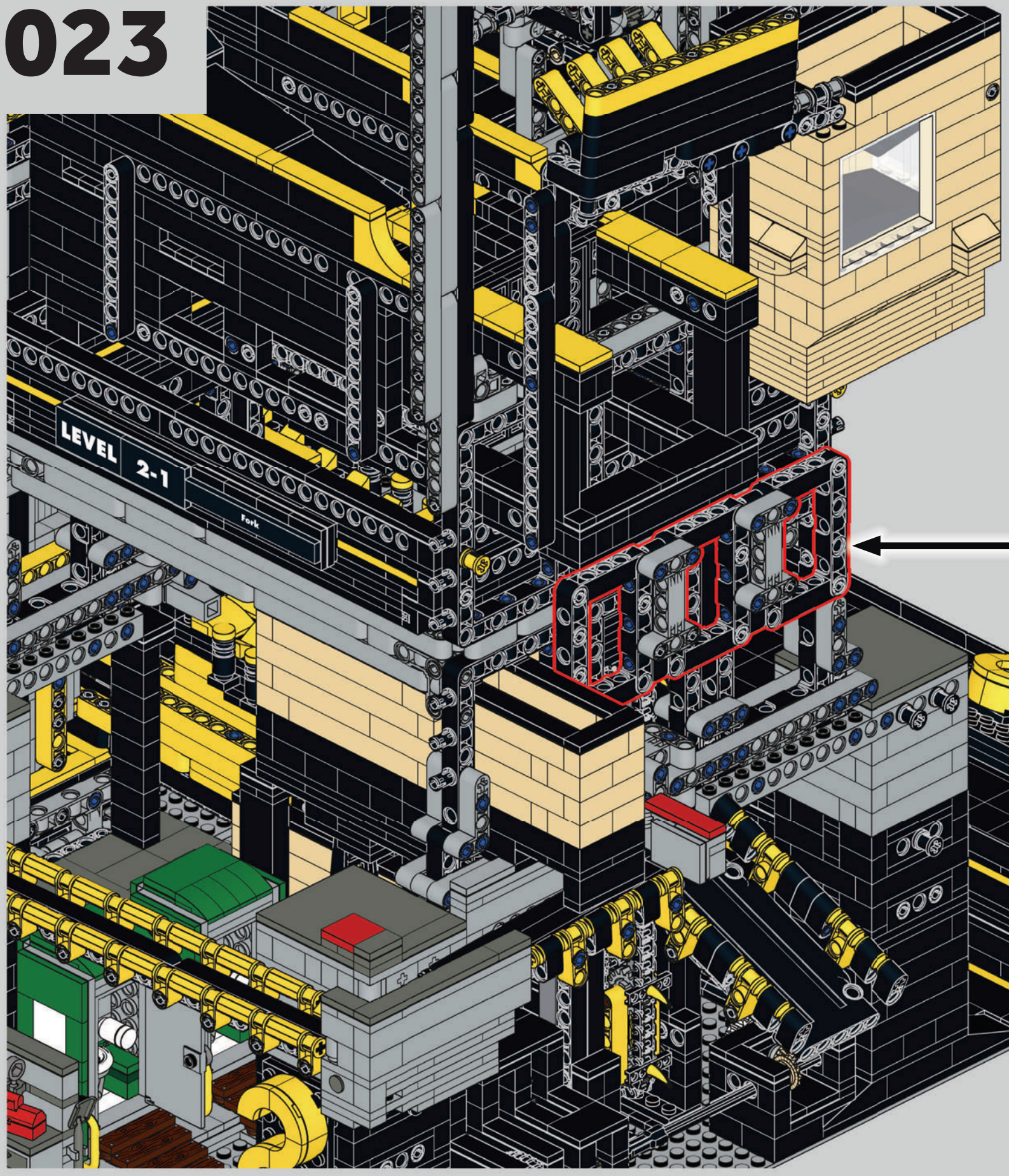

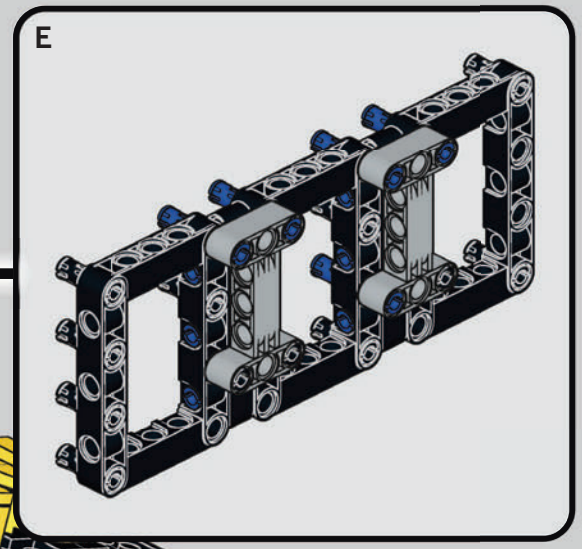

pg. 190

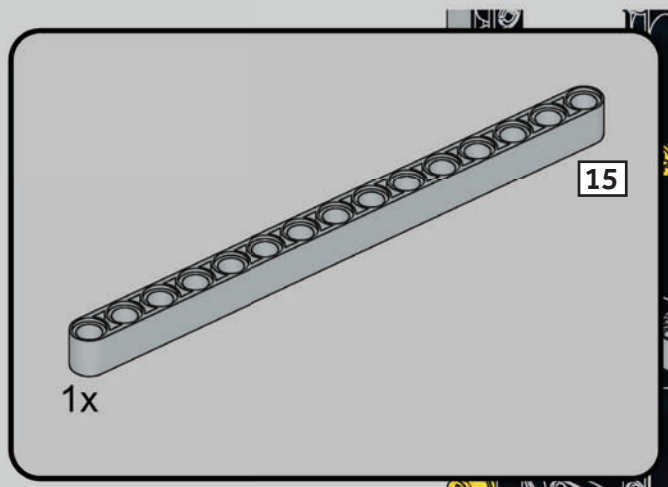
15
1x

LEVEL 1-1
Spiral Staircase

025

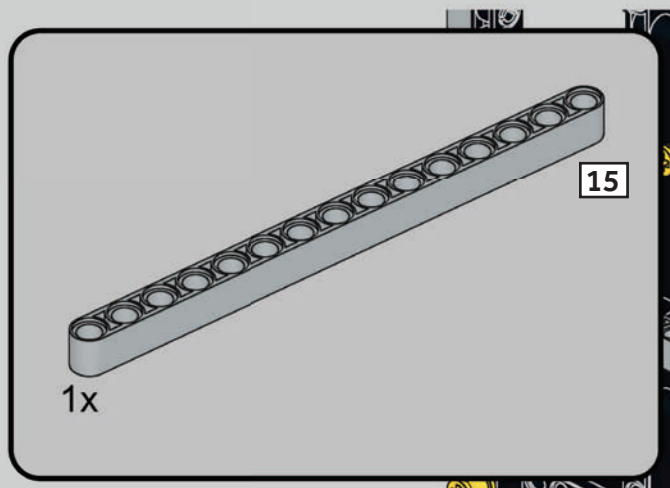

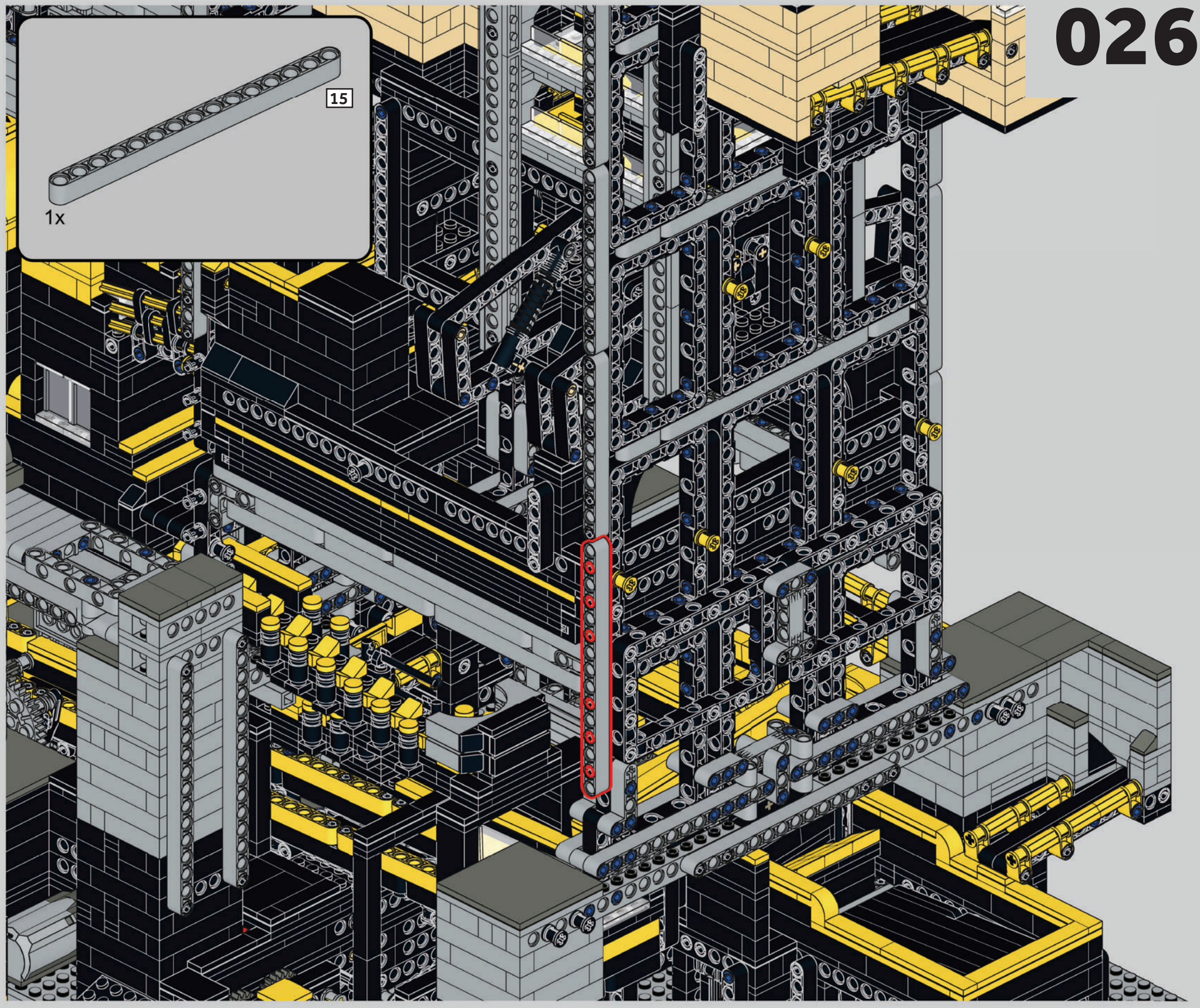
15
1x

027

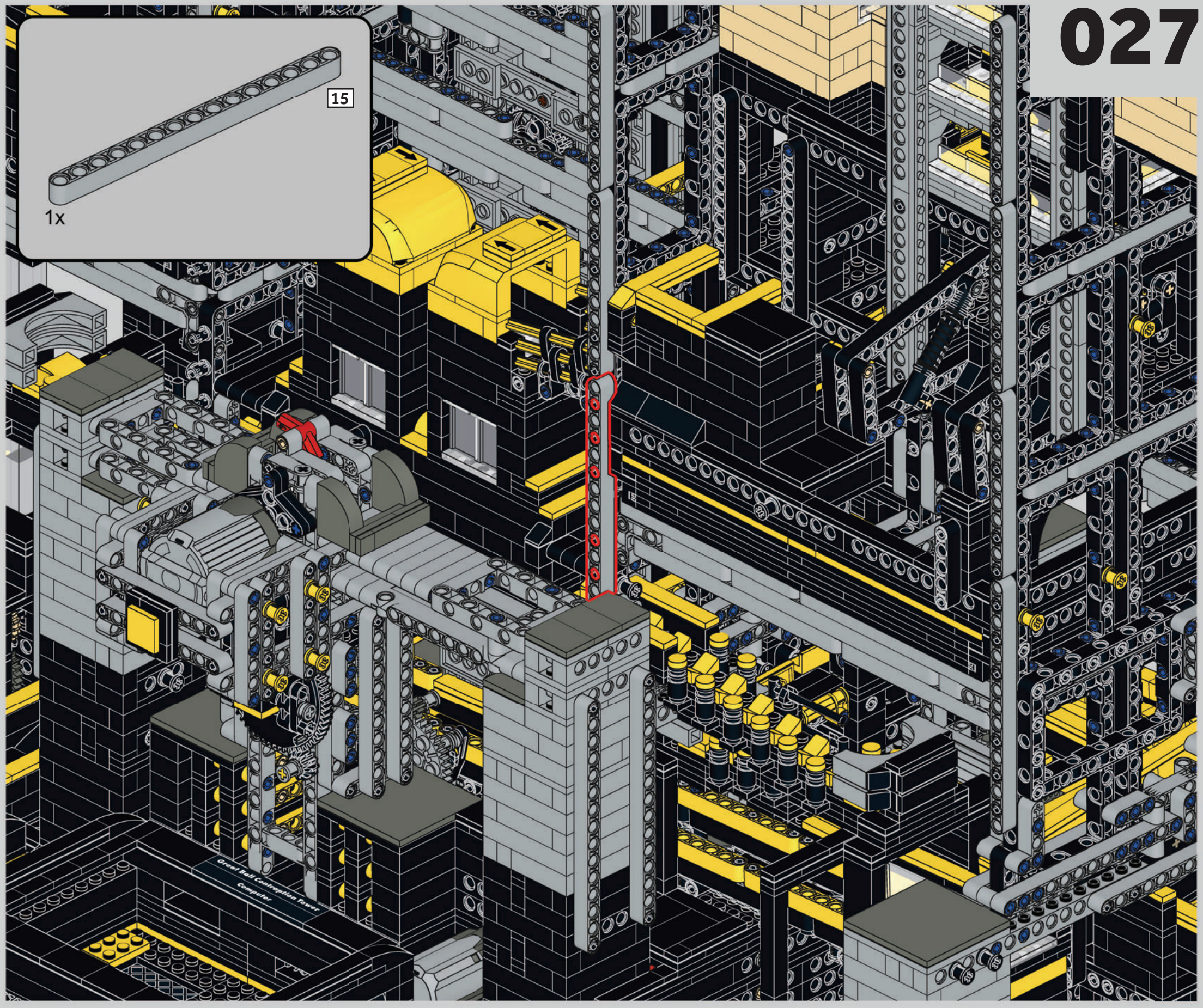

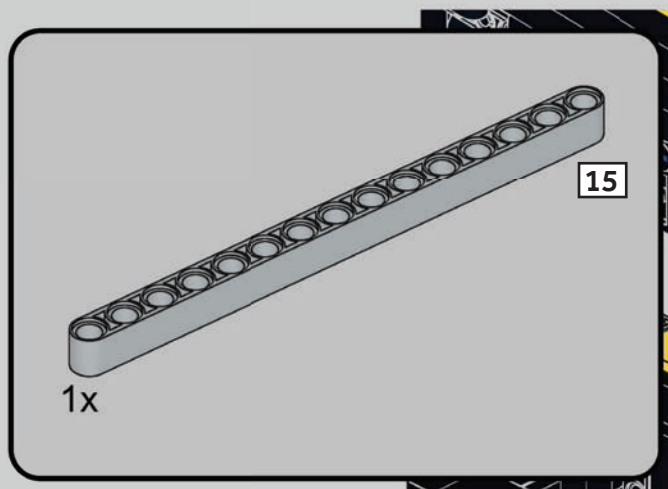
15
1x

029

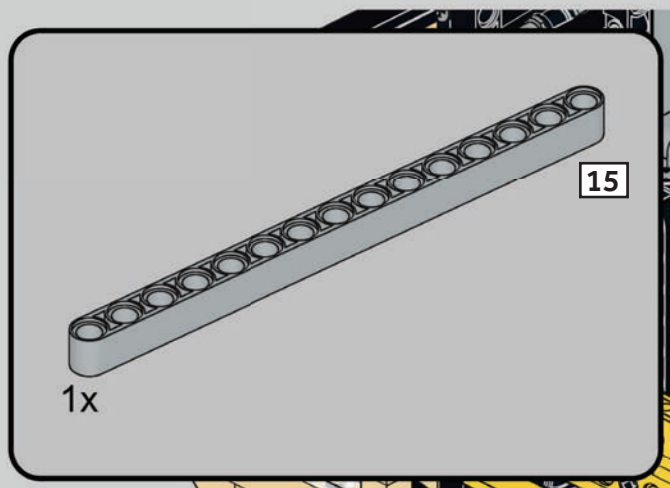

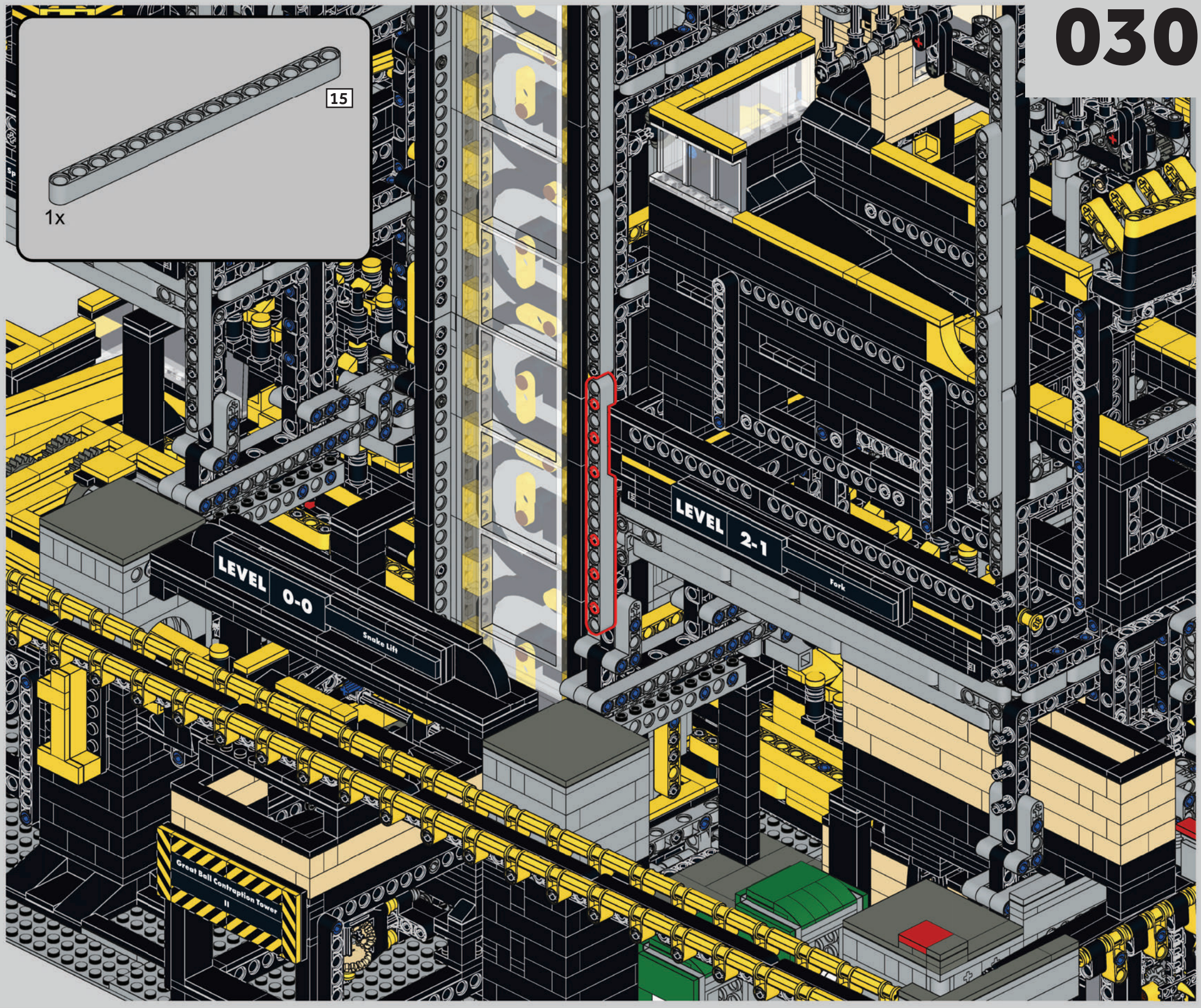
15
1x
LEVEL 0-0
Snake Lift
LEVEL 2-1
Fork
Great Ball Contraption Tower
II

031

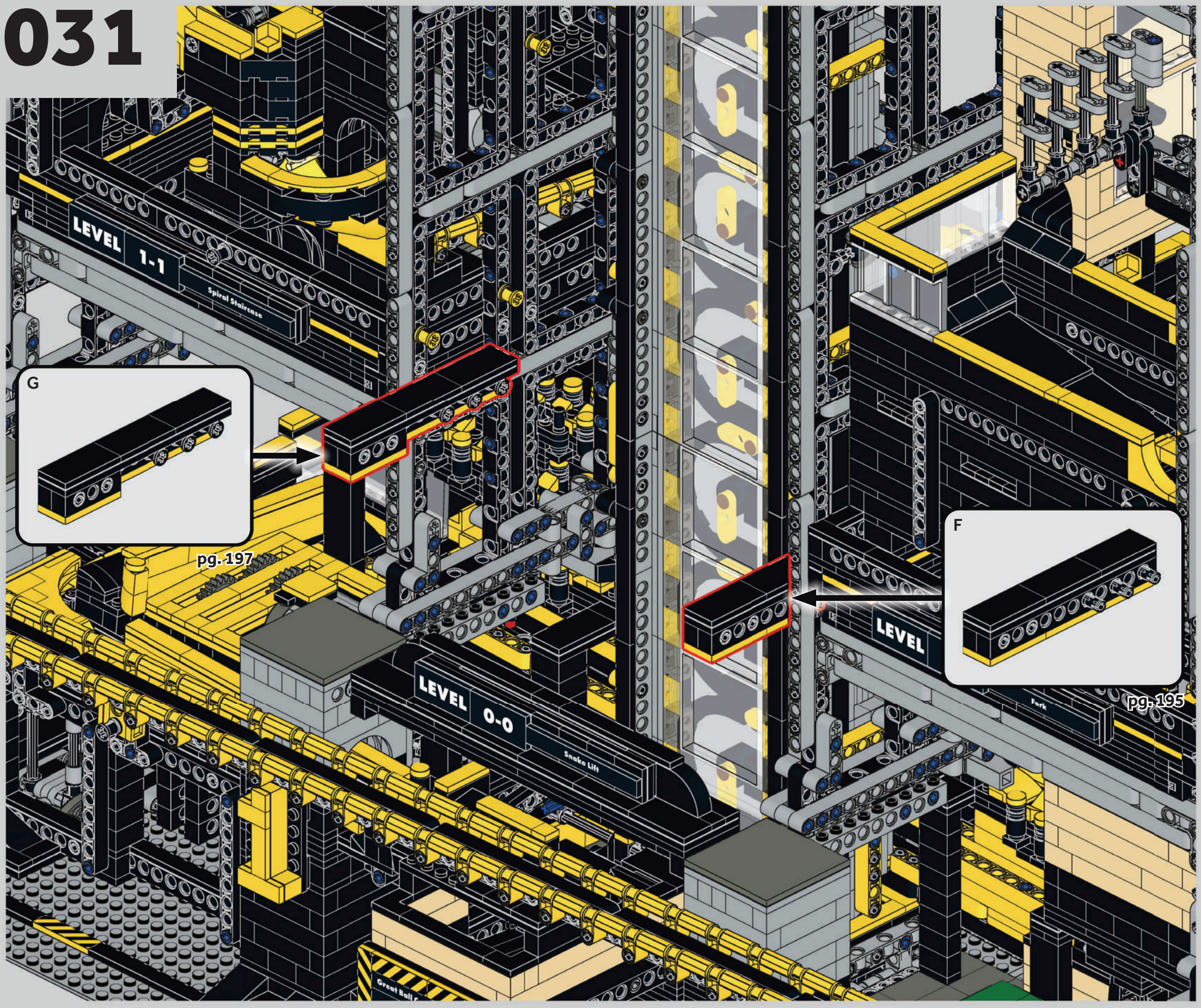
LEVEL 1-1
Spiral Staircase
G
pg. 197
LEVEL 0-0
Snake Lift
LEVEL
Fork
F
pg. 195

032

D
02

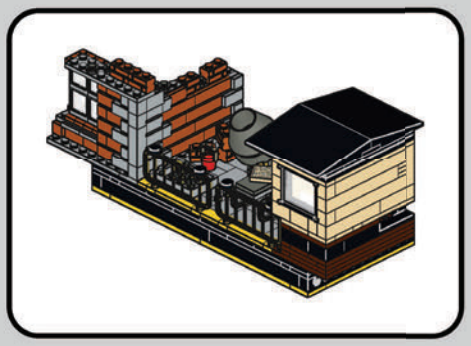

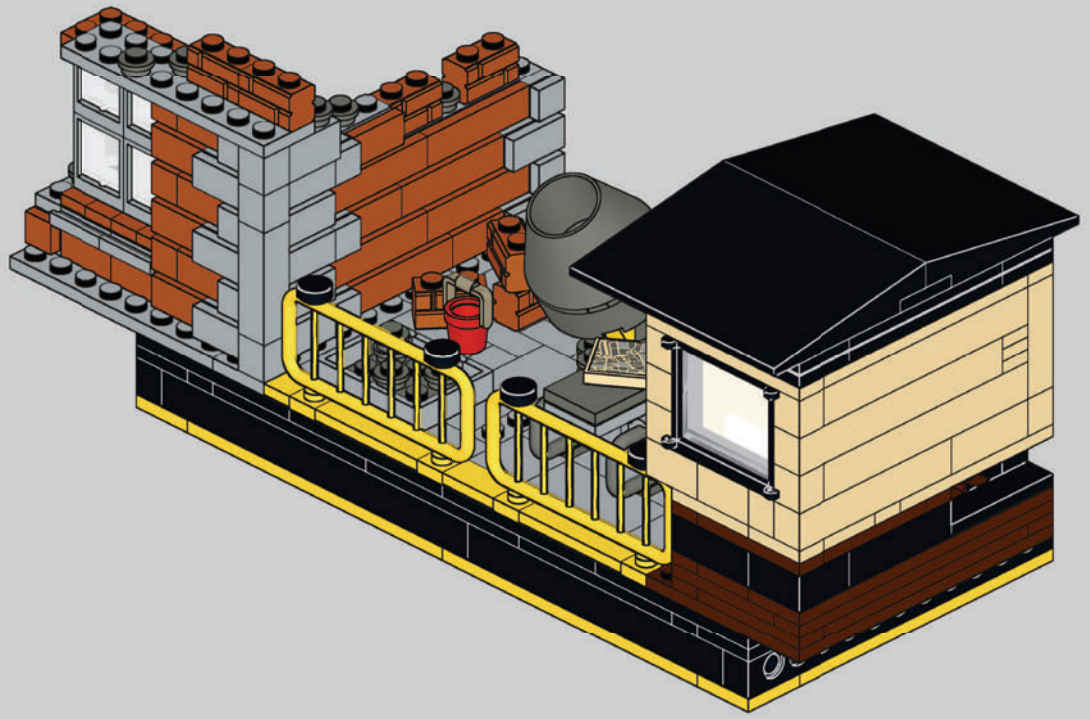

033

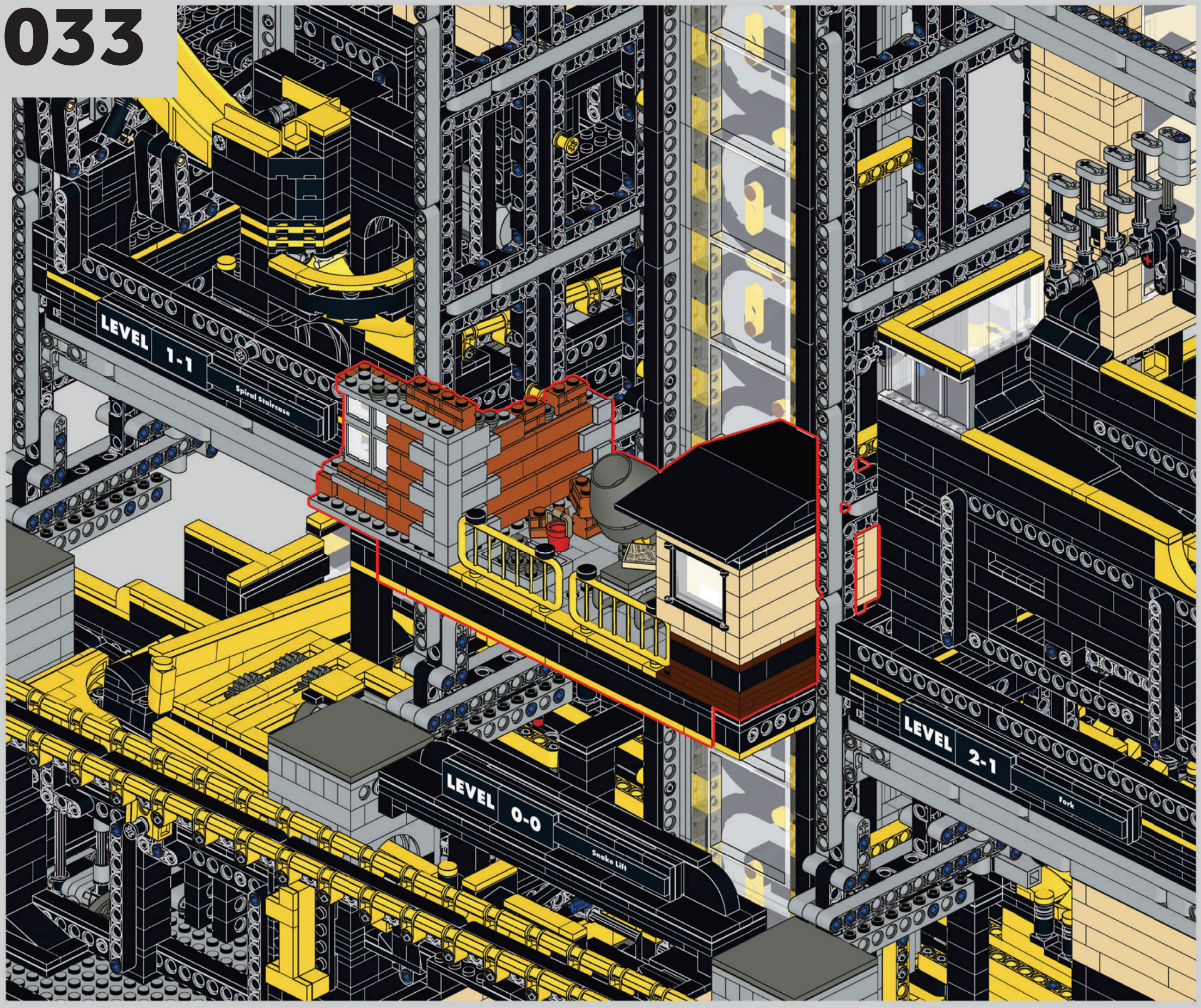

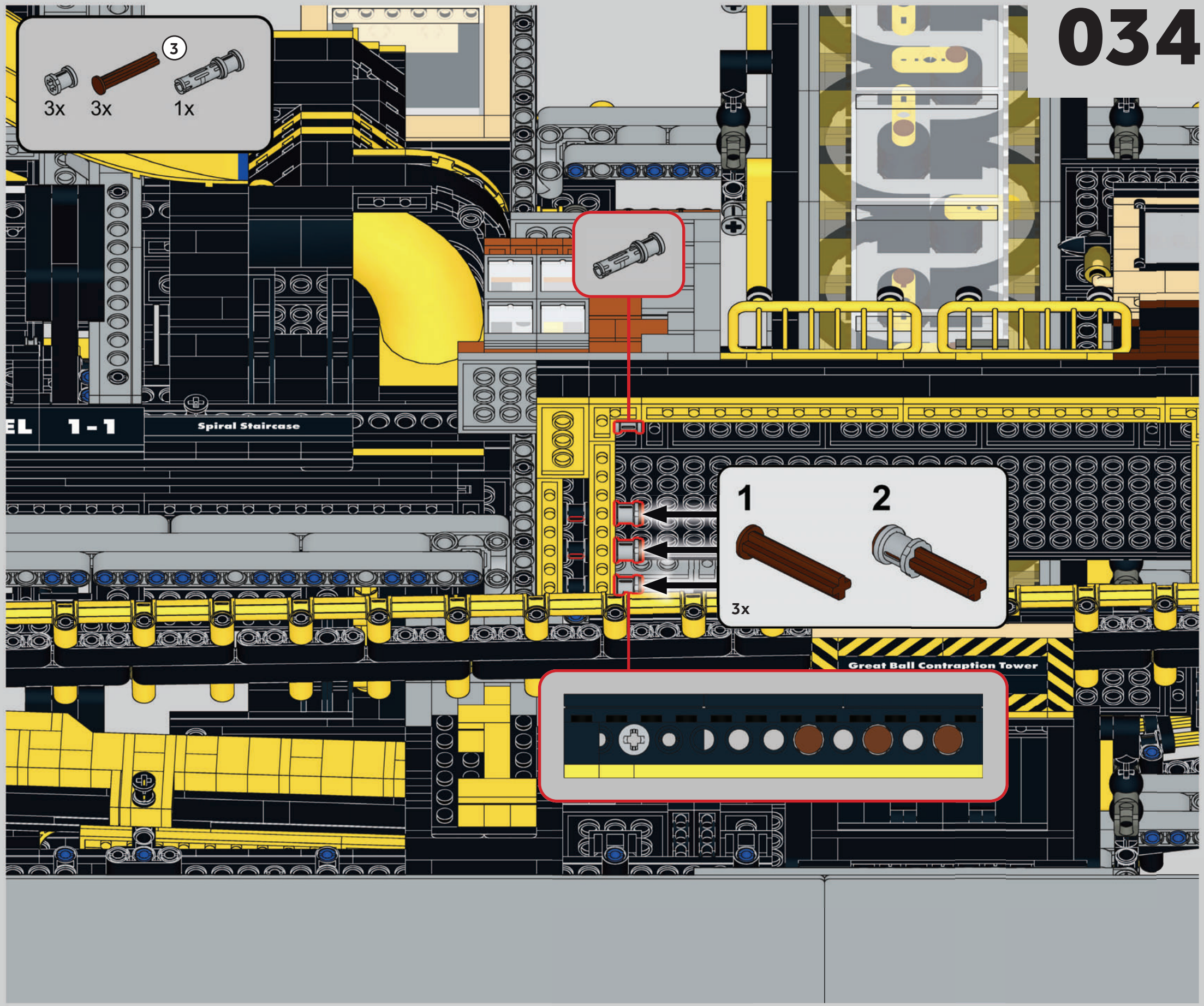
3
3x
3x
1x
1
2
3x
1 - 1
Spiral Staircase
Great Ball Contraption Tower

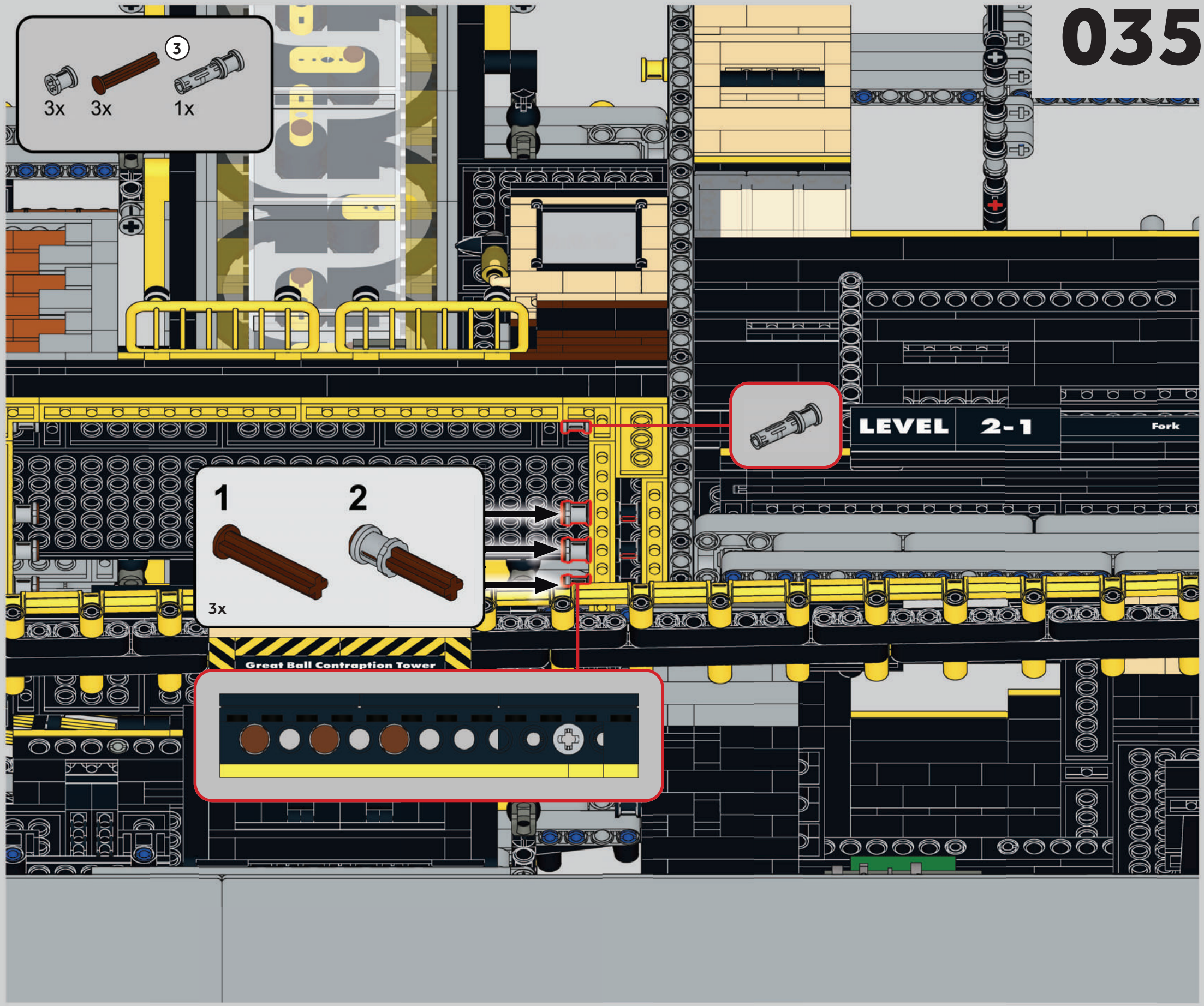
3
3x
3x
1x
1
2
3x
LEVEL 2-1
Fork
Great Ball Contraption Tower

036

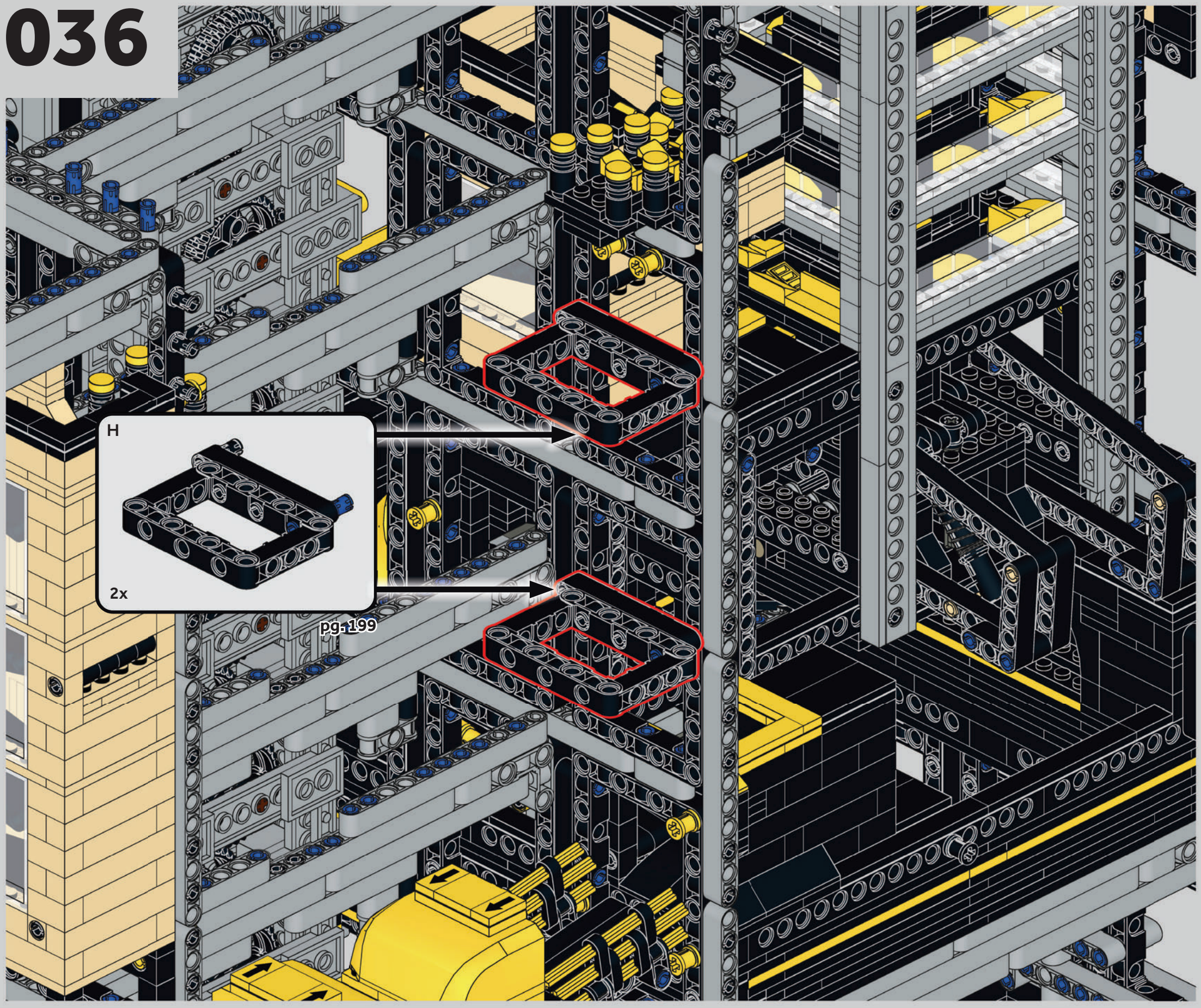

037

H

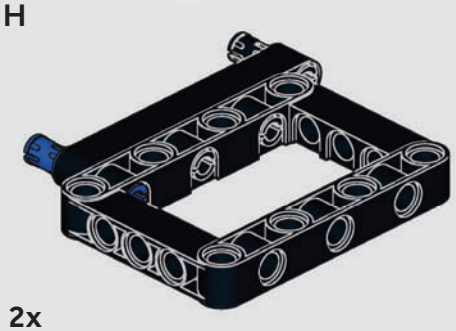

2x

pg. 199

038

S
02

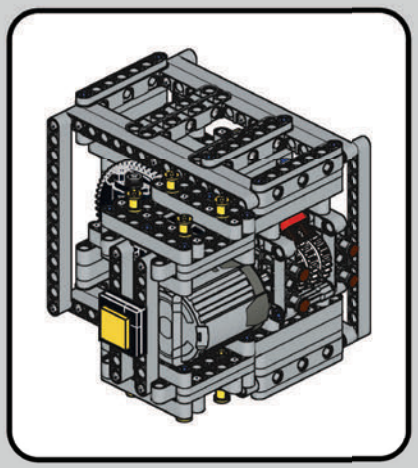

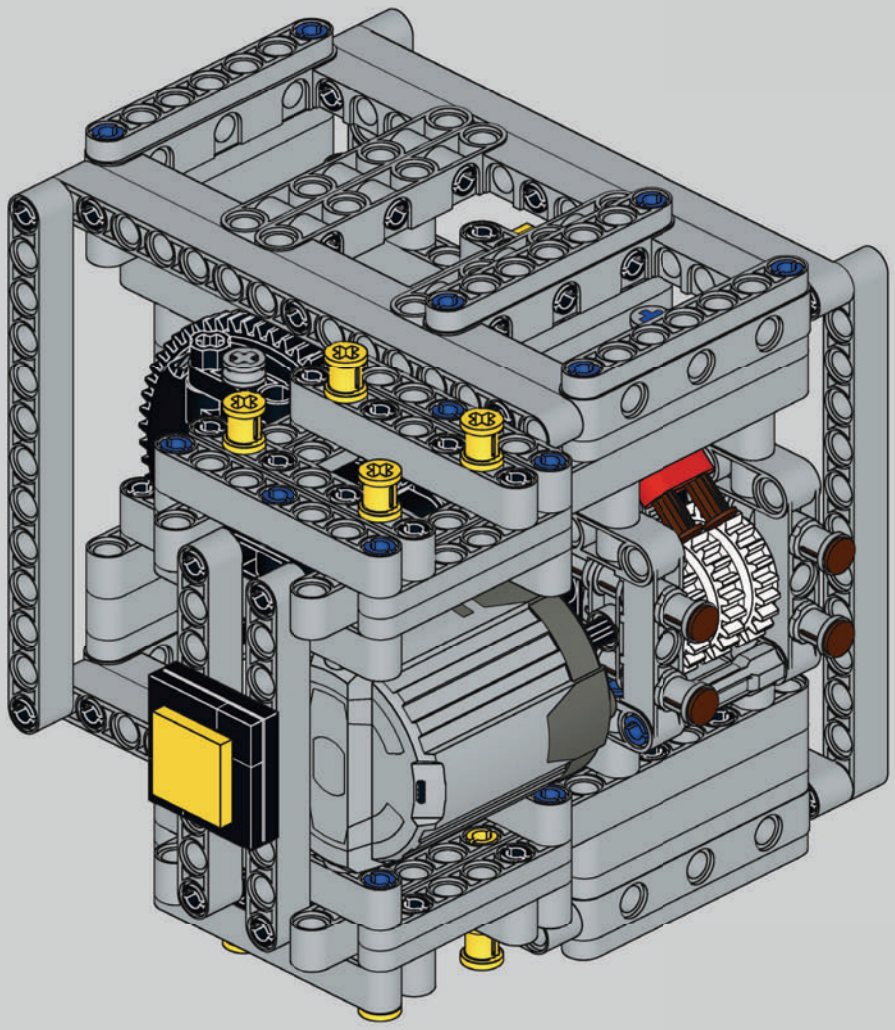

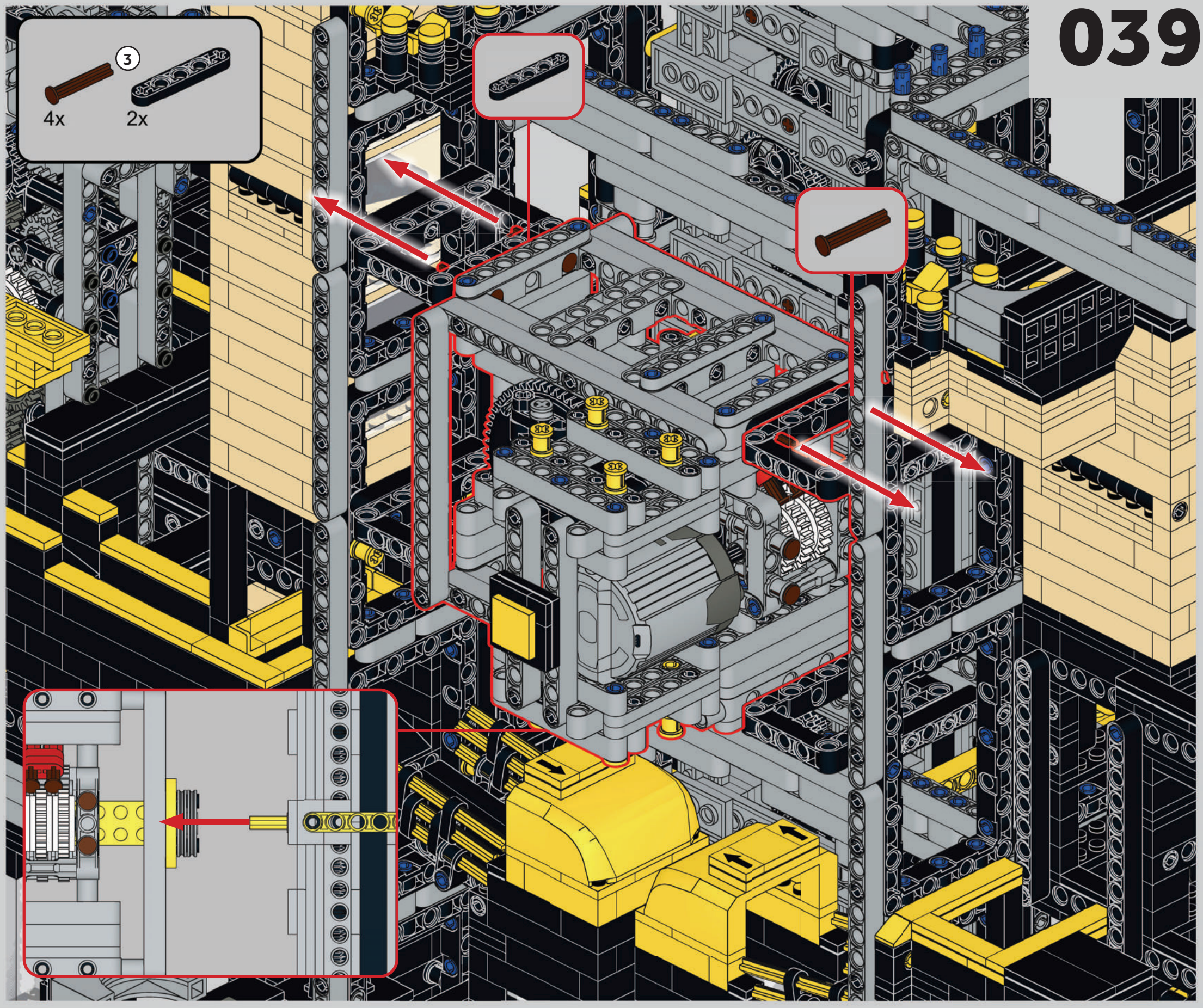
3
4x
2x

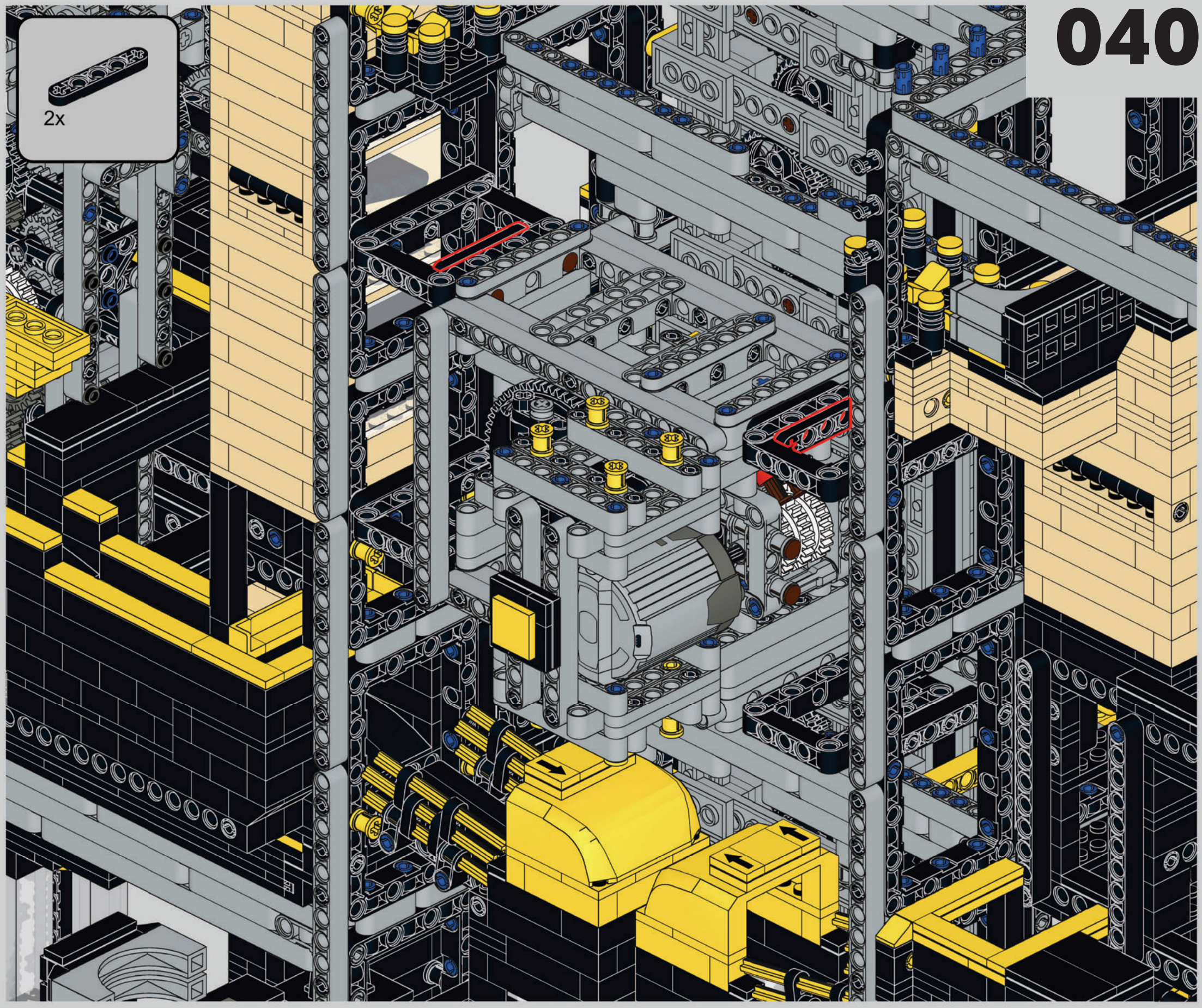
2x

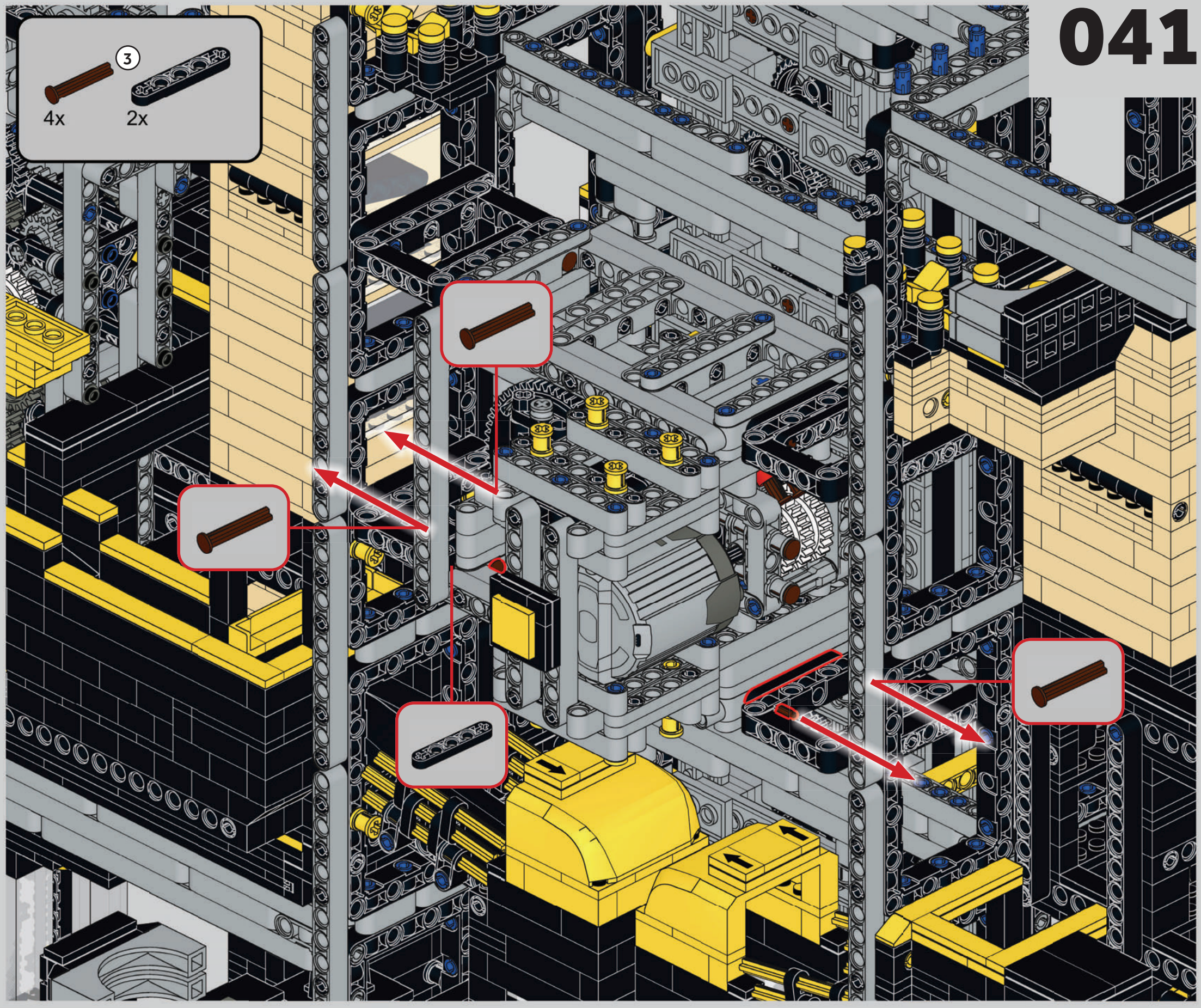
3
4x
2x

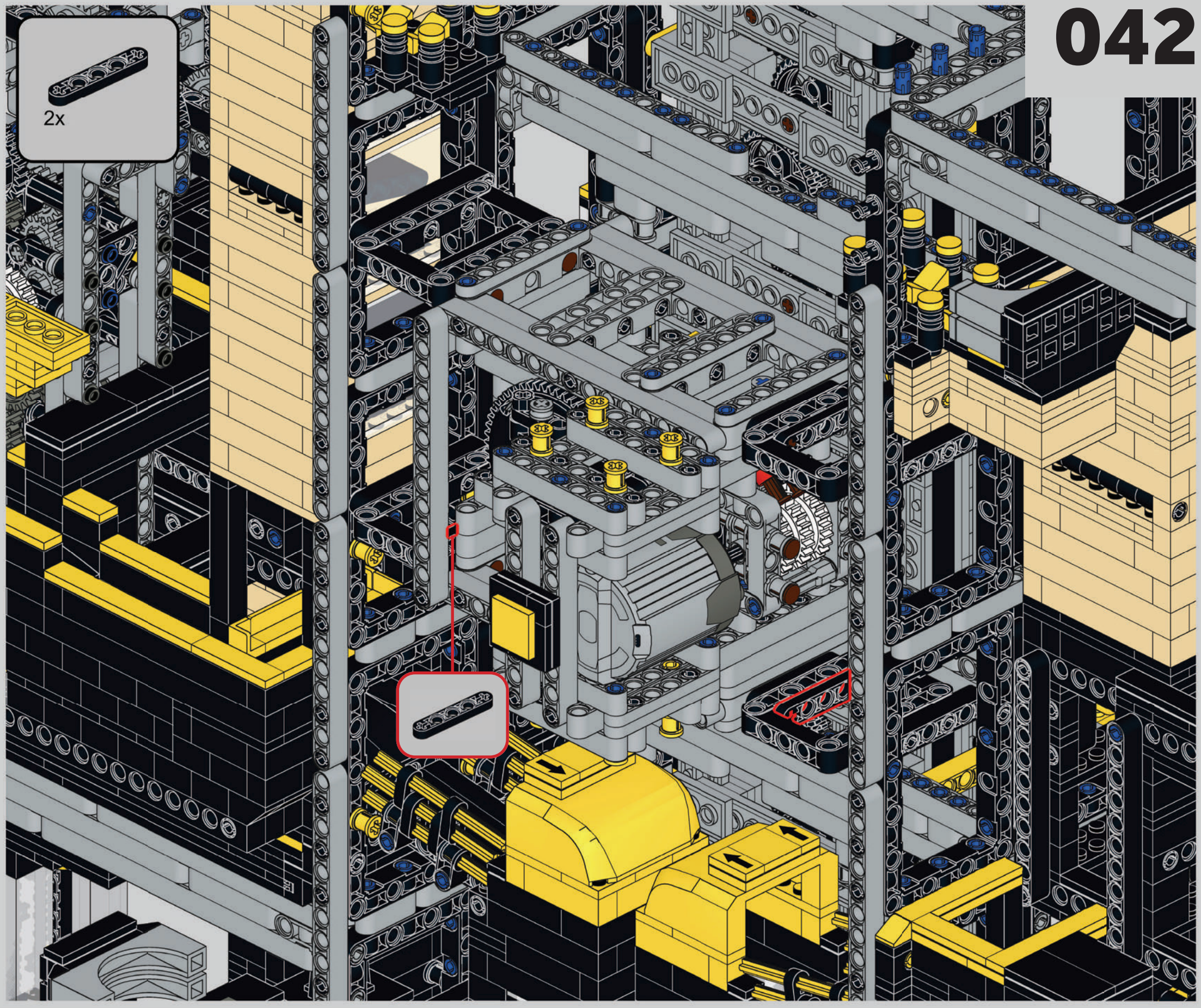
2x

043

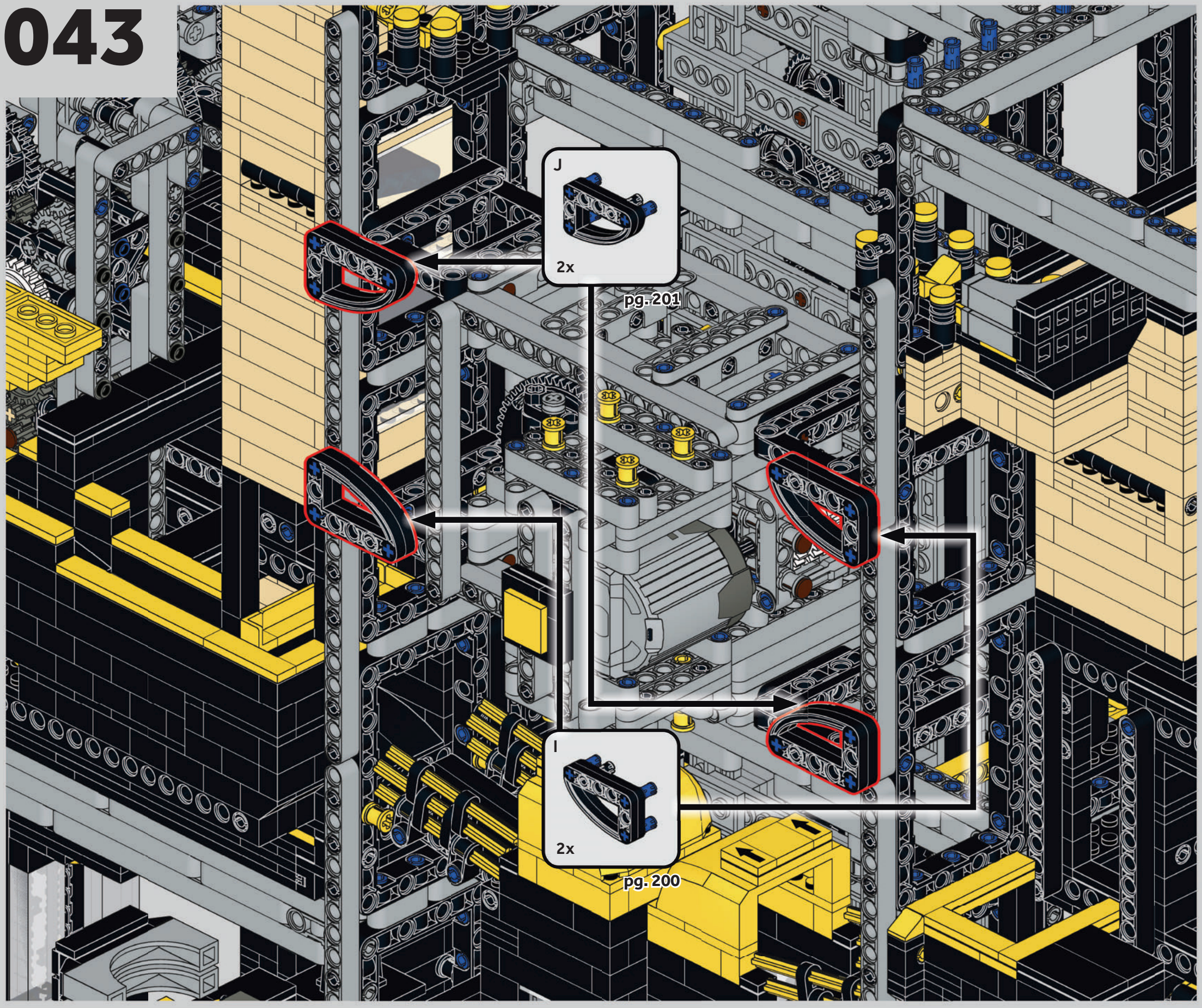

044

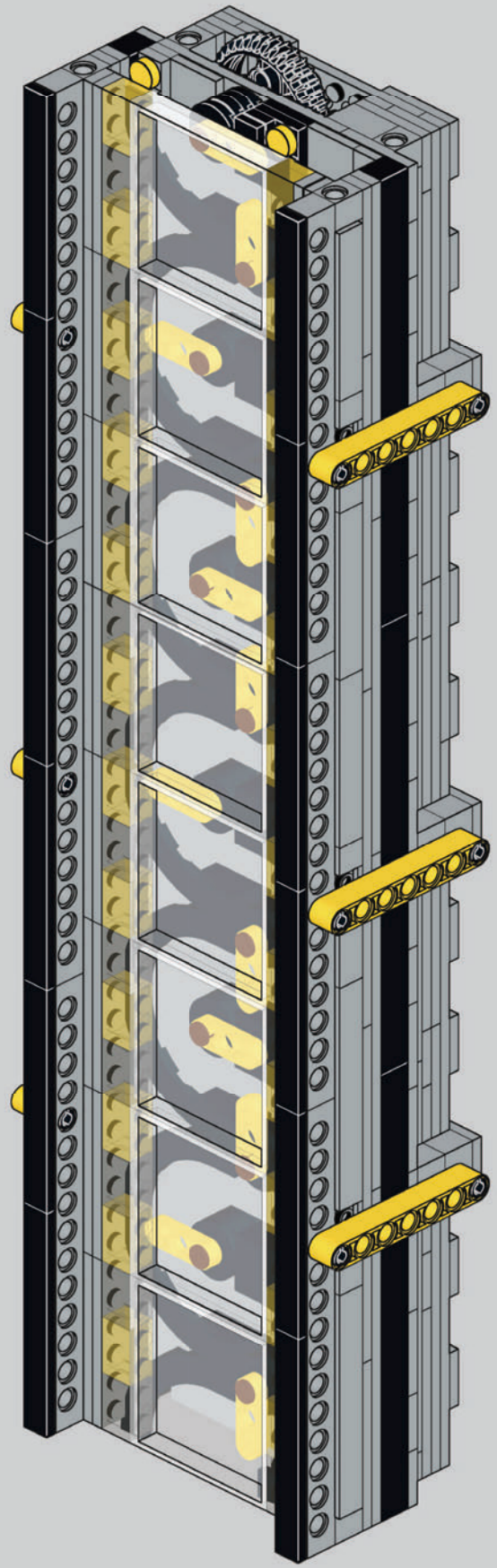

S
01

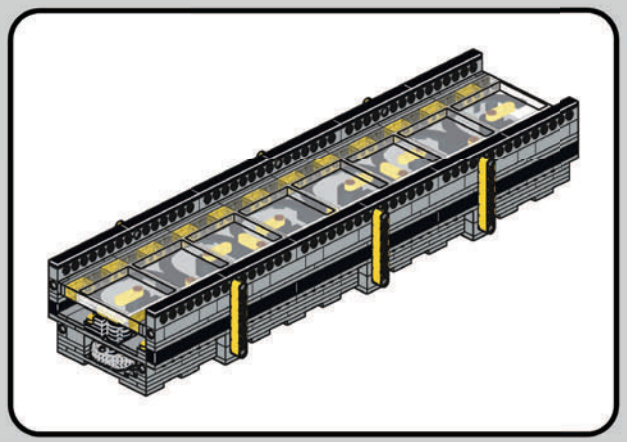

045

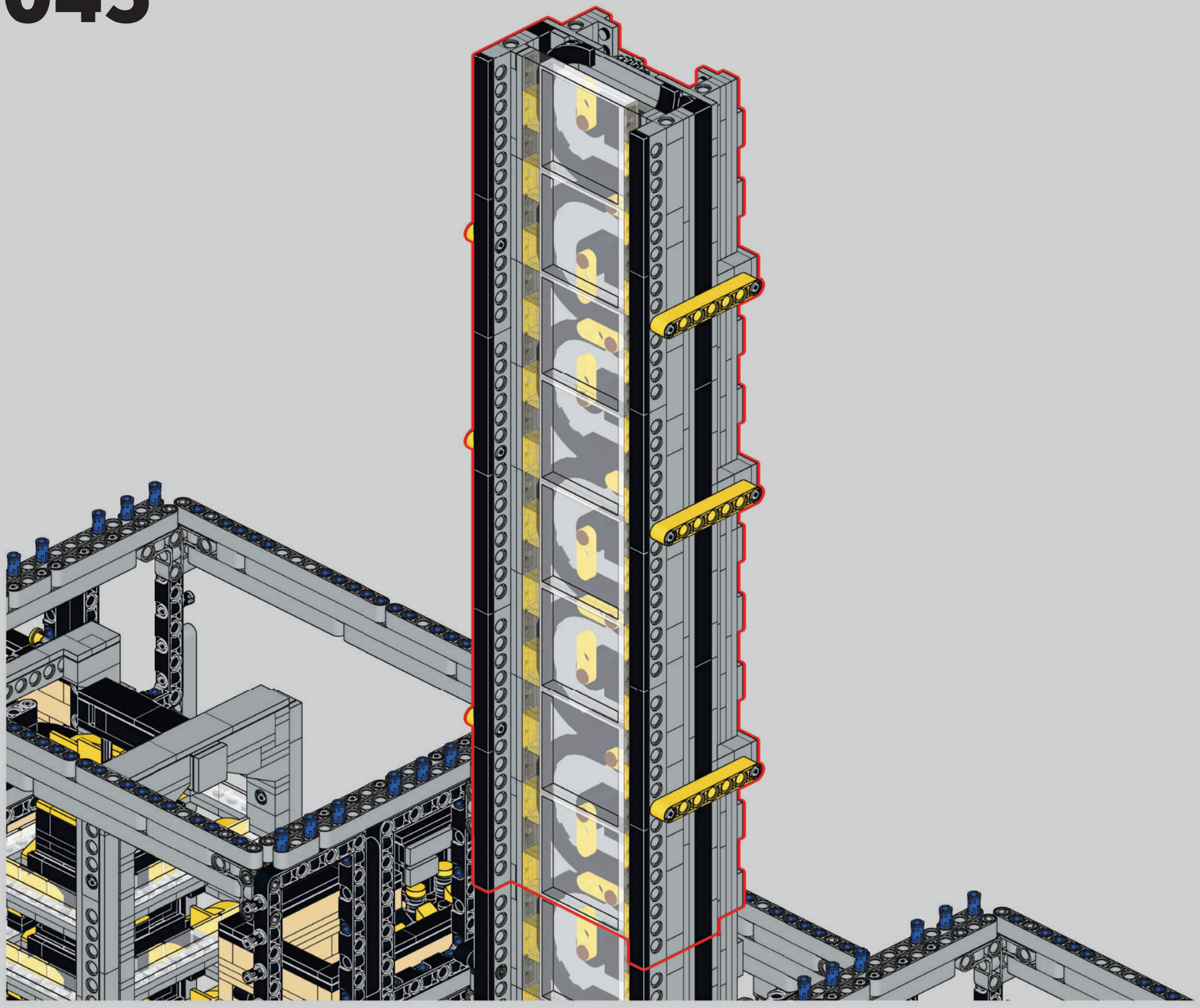

046

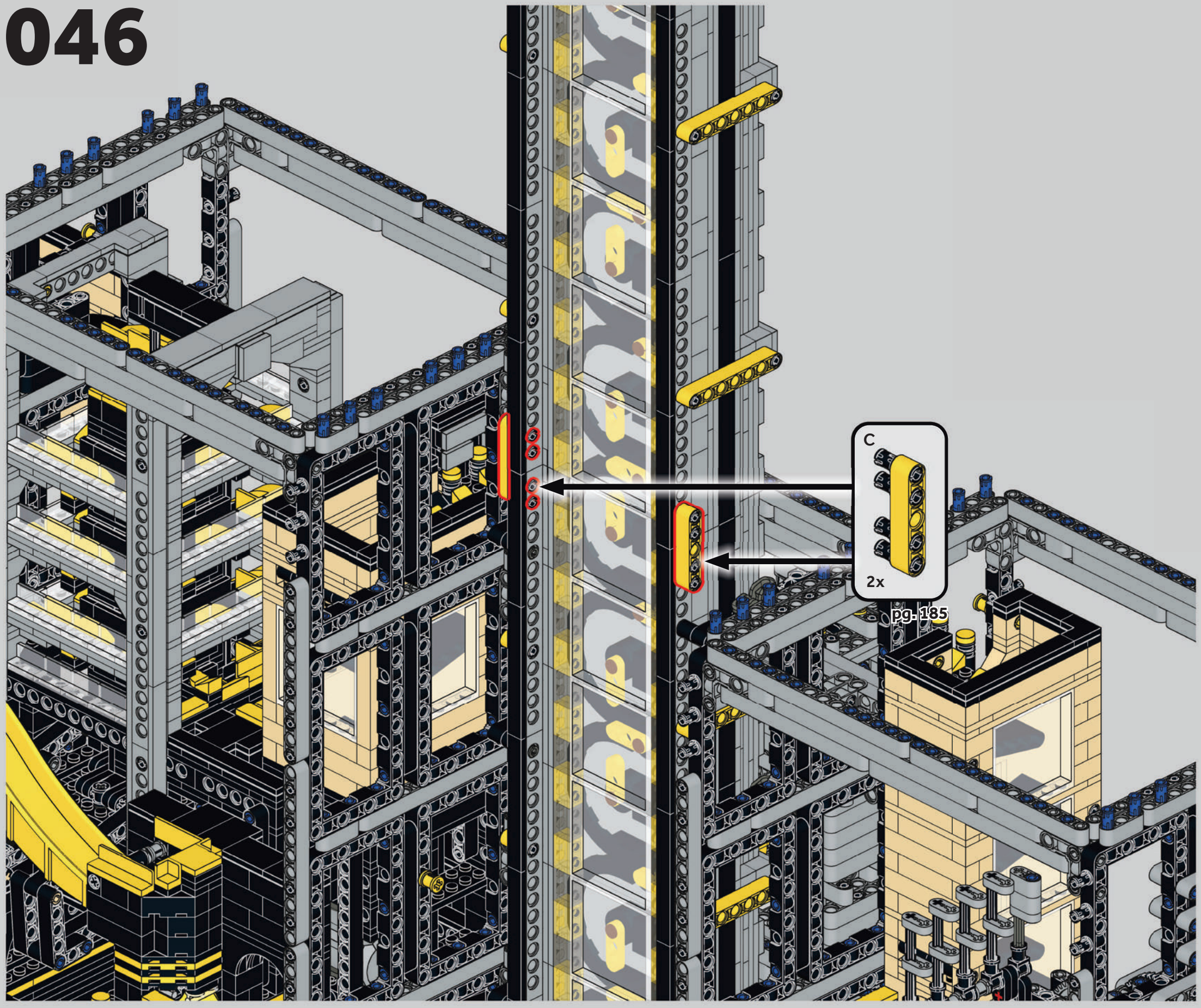

047

M
04

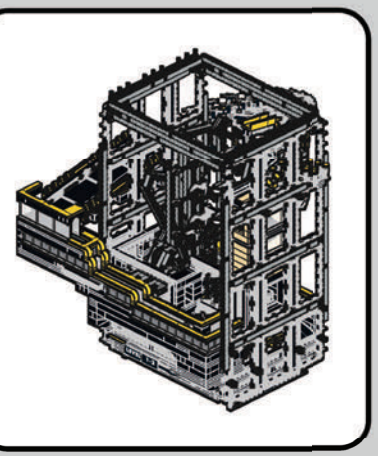

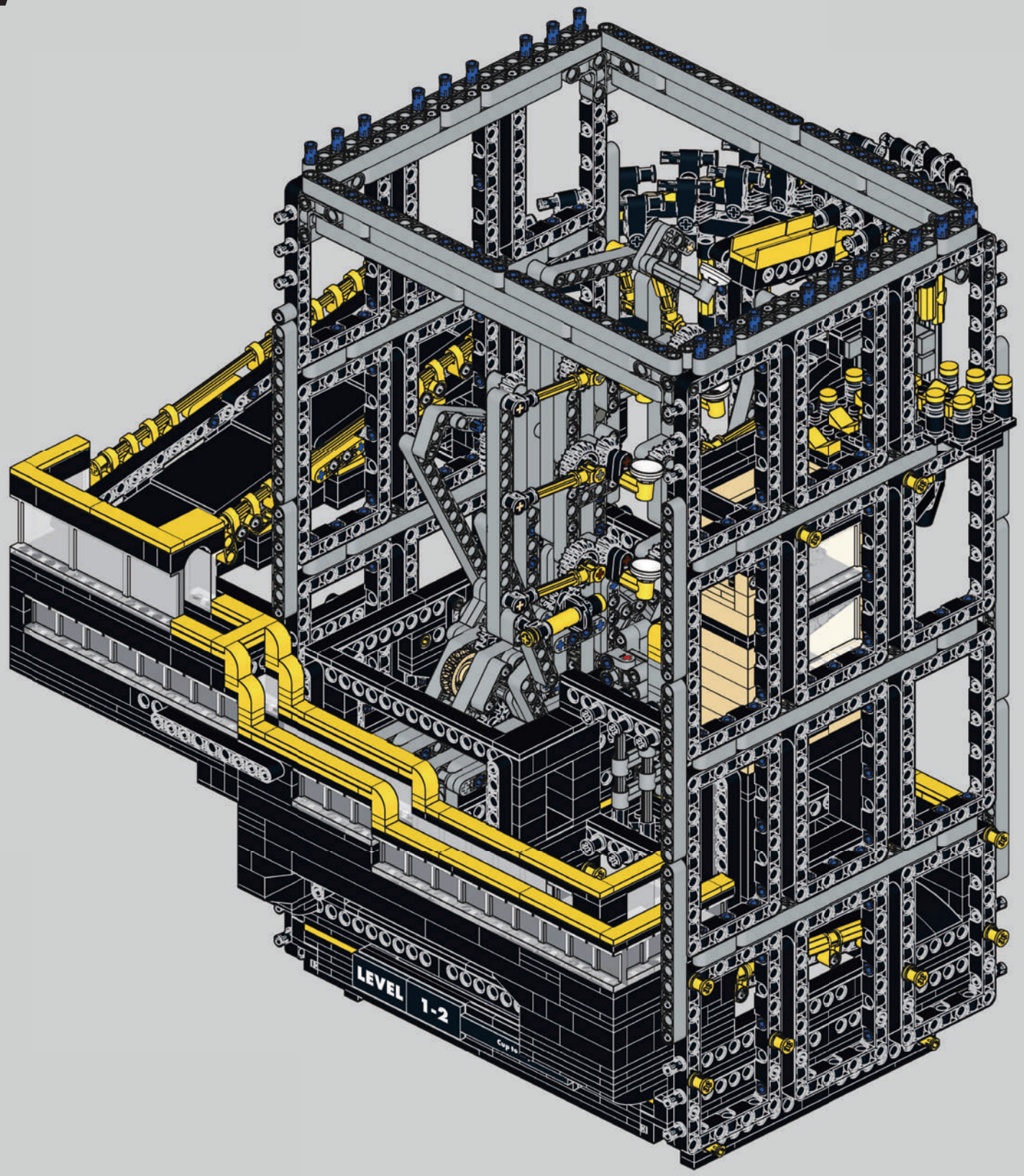

048

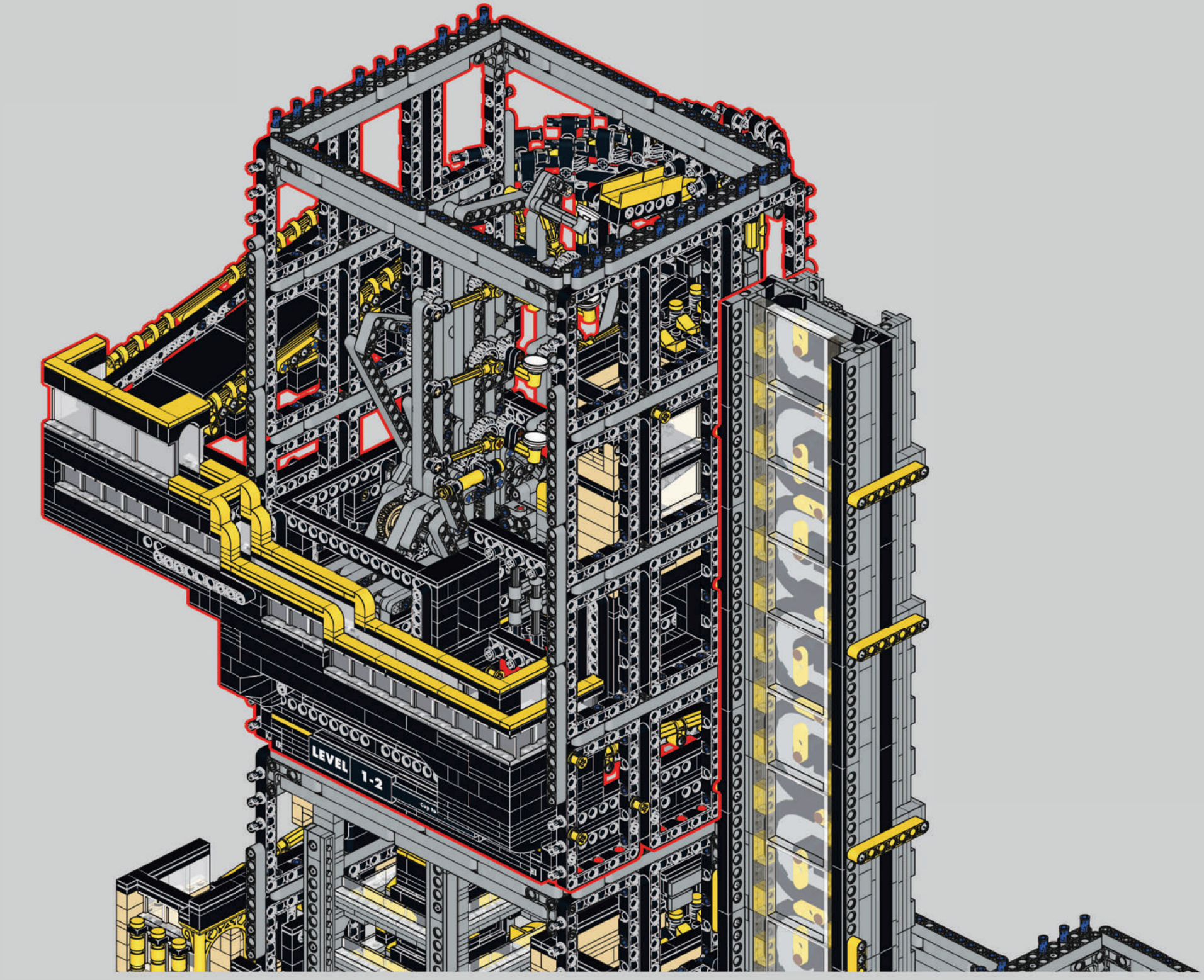

049

M
05

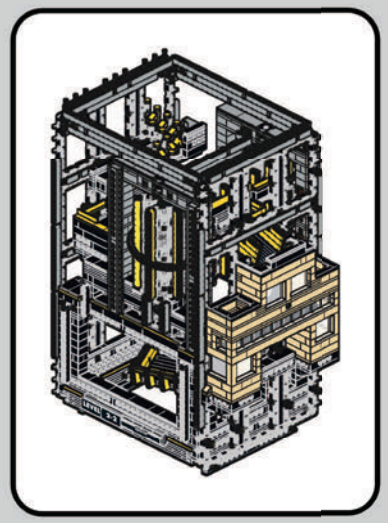

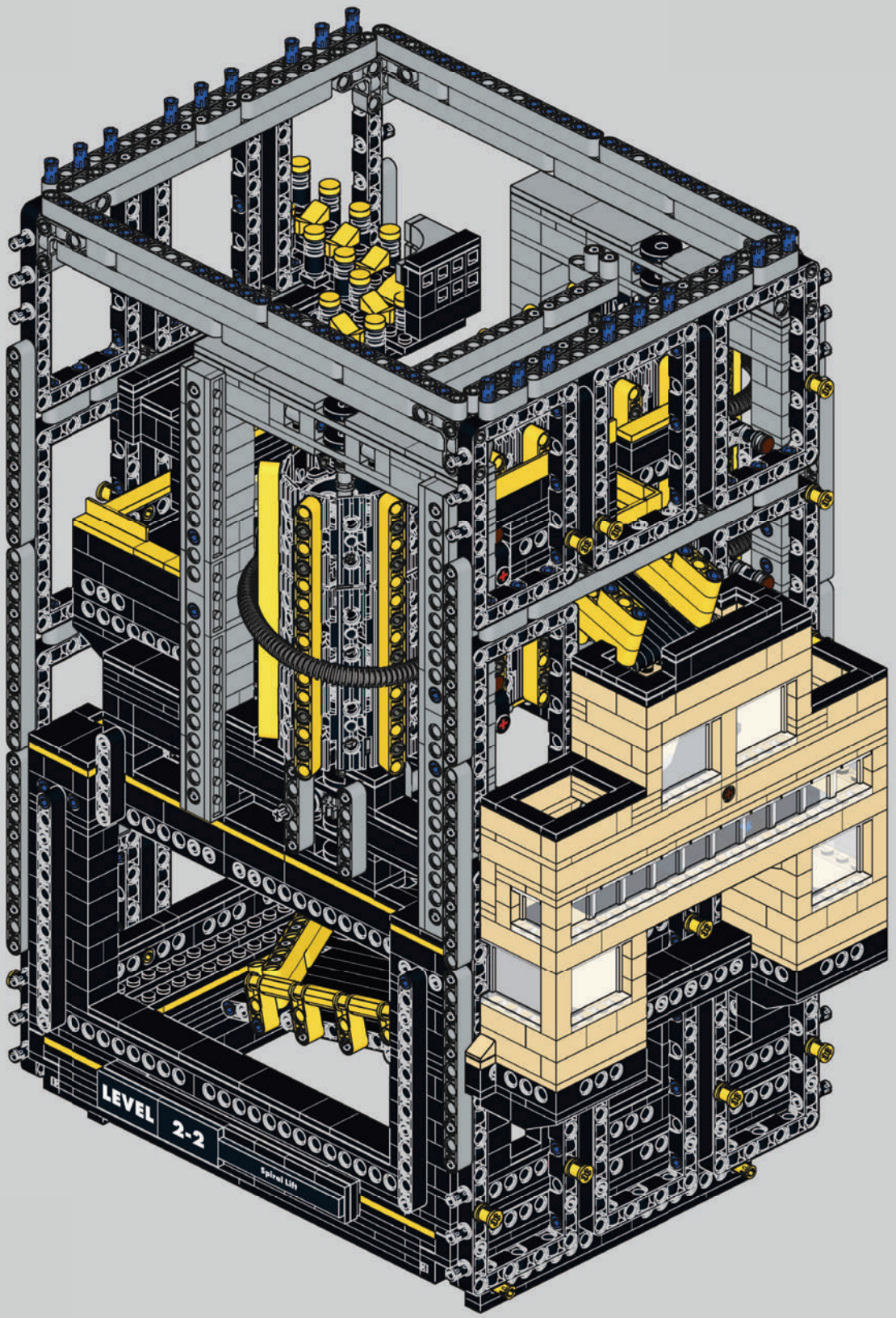

050

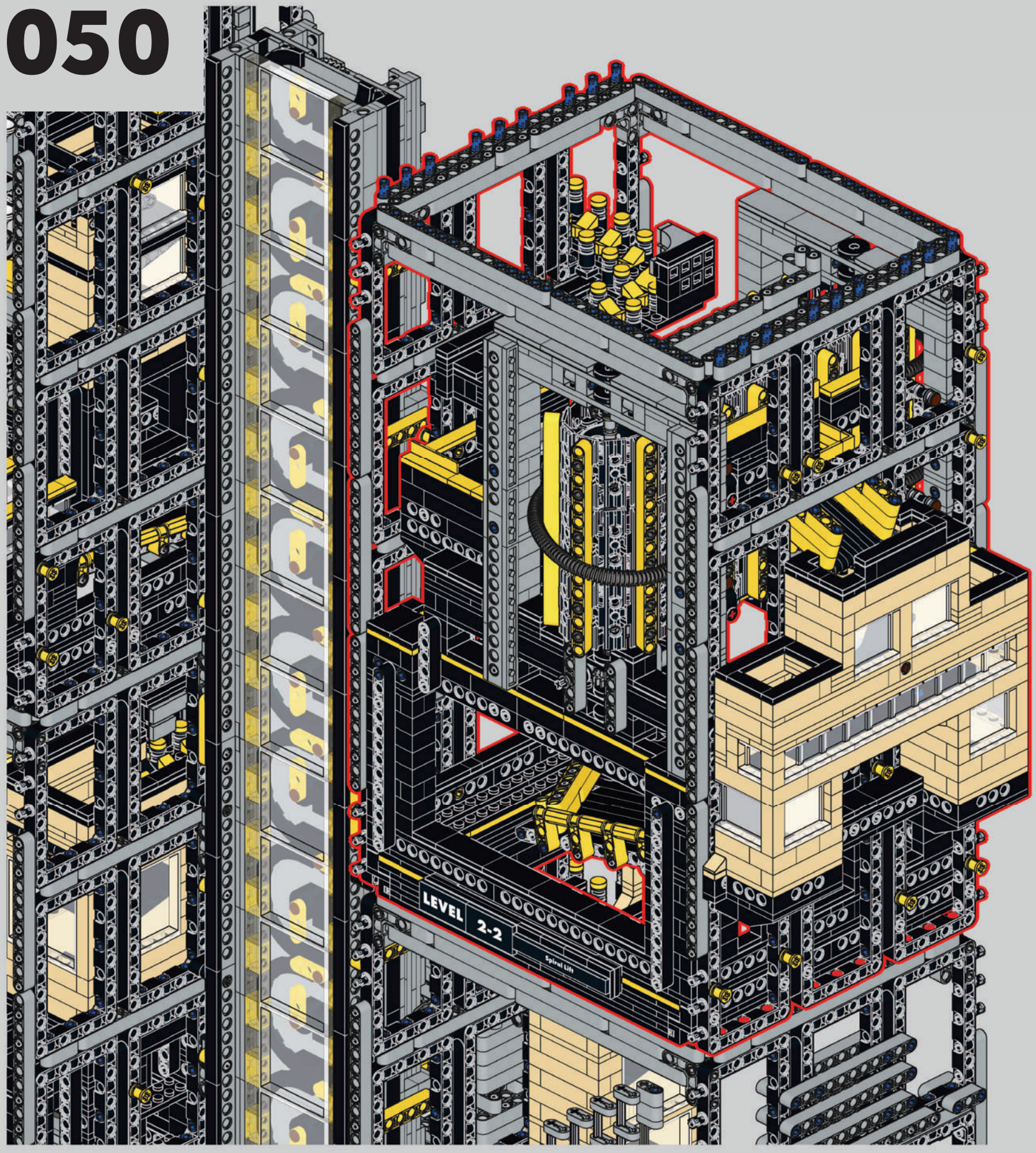

051

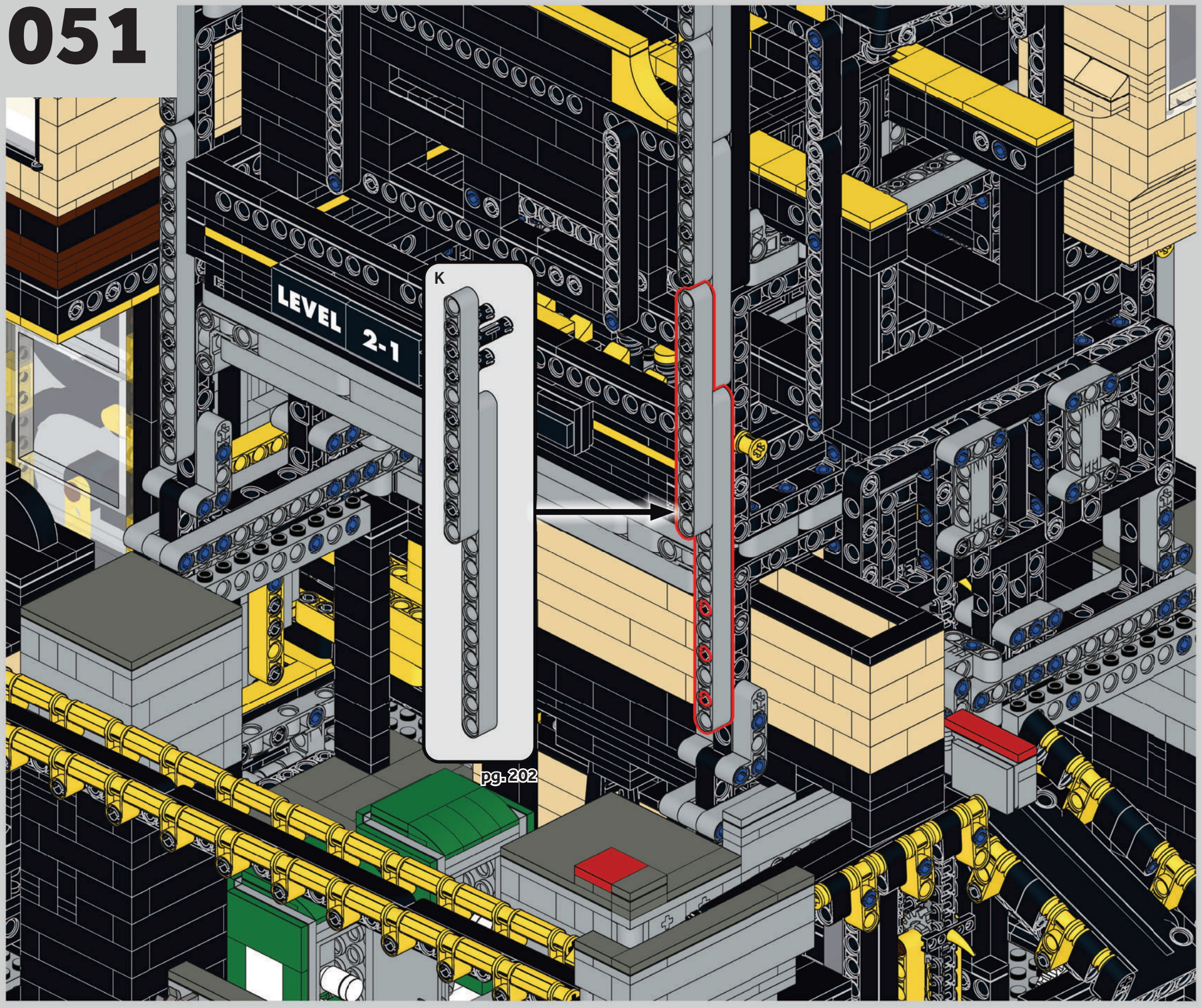

052

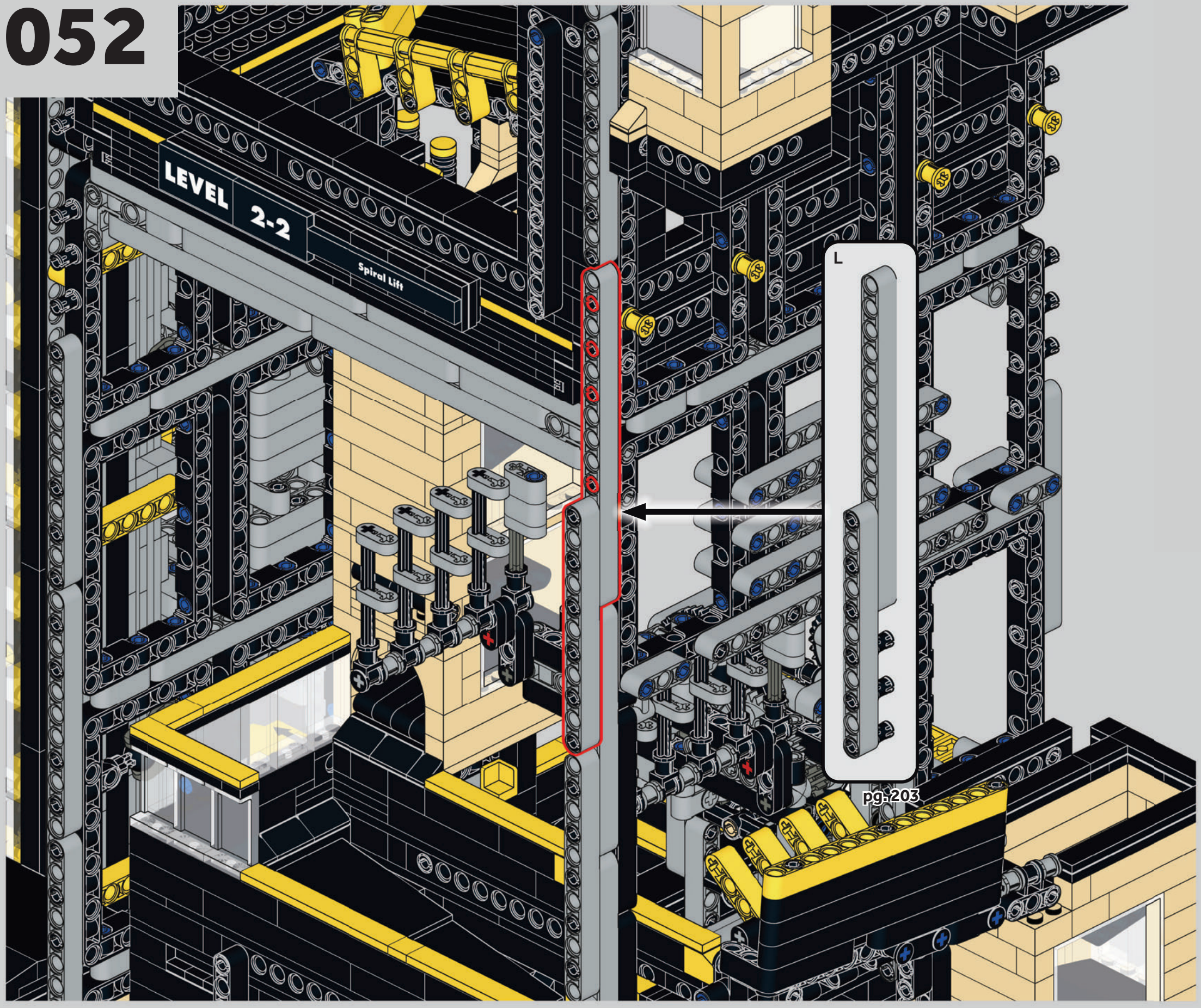

pg. 203

053

A
01

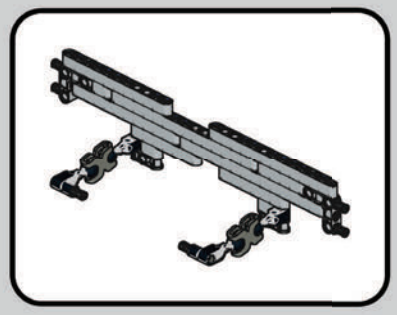

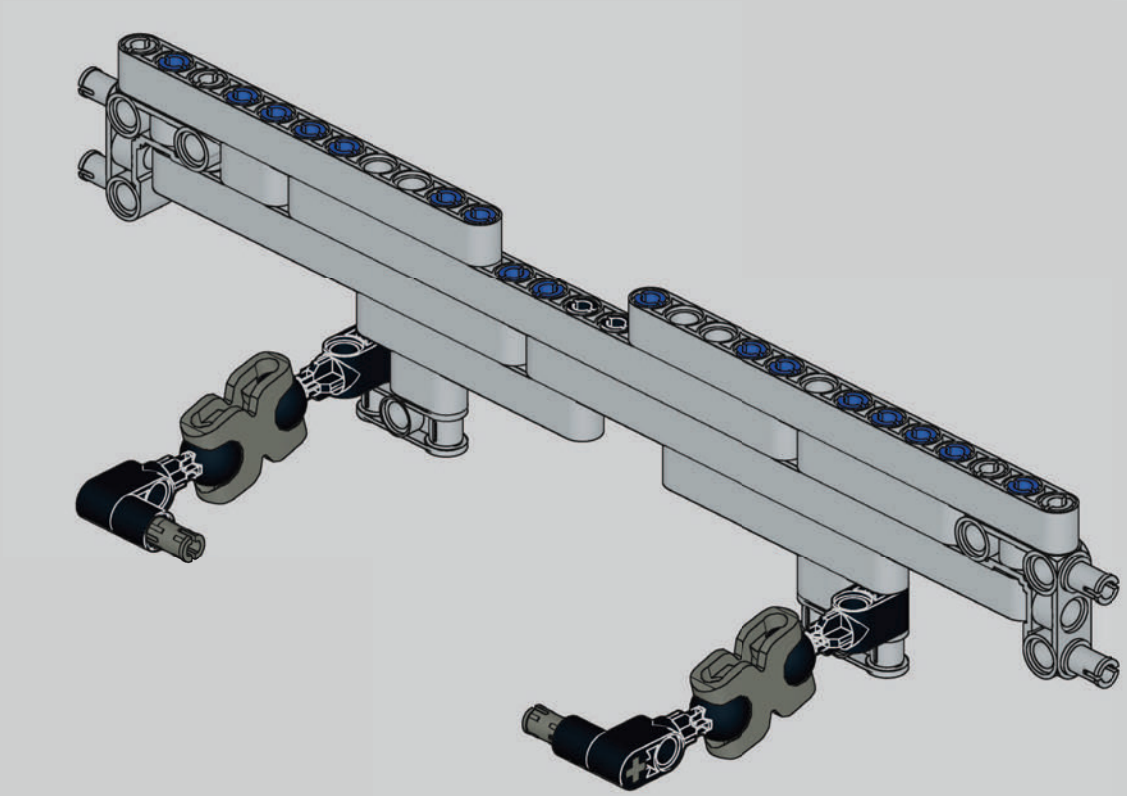

054

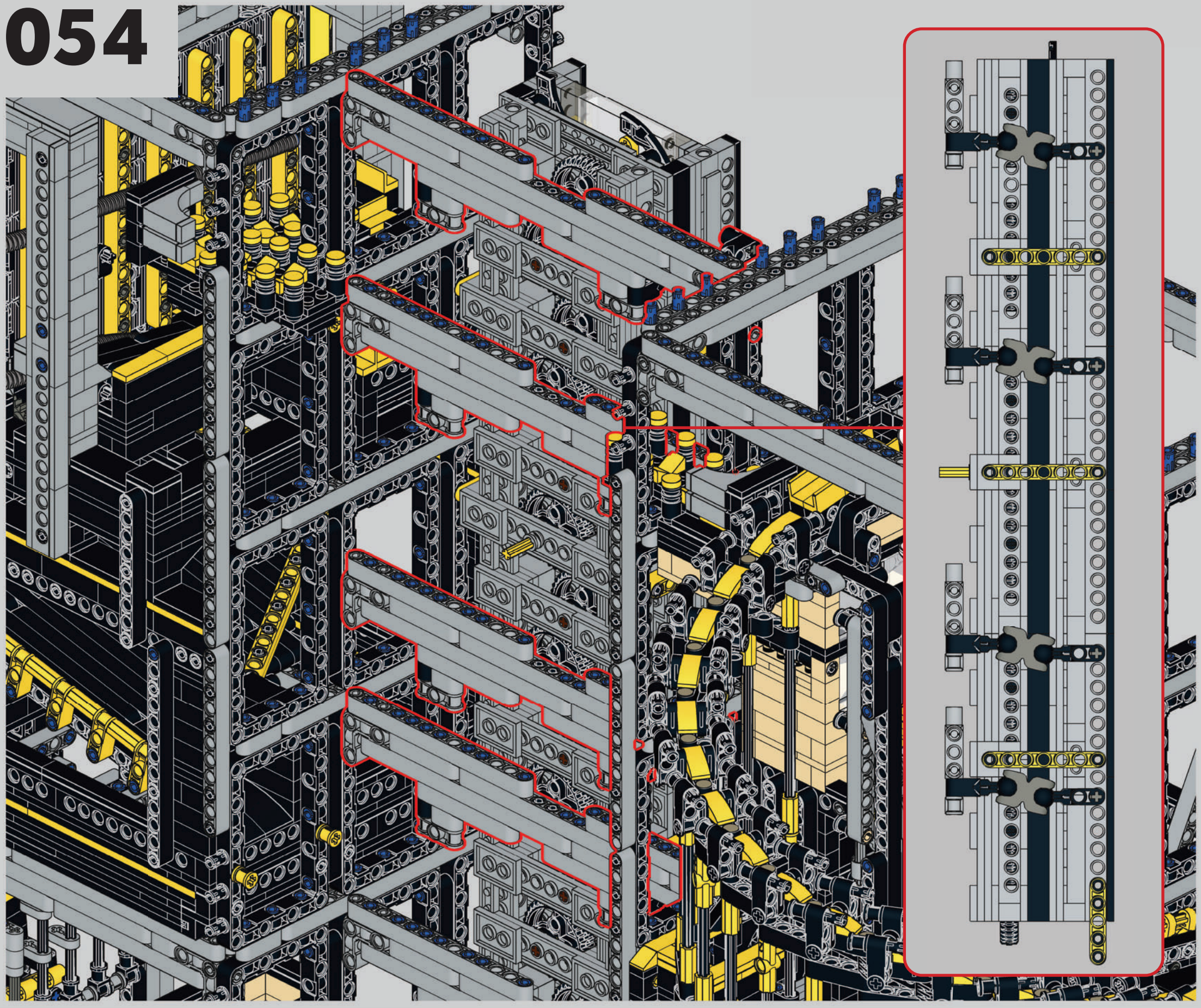

055

R
01

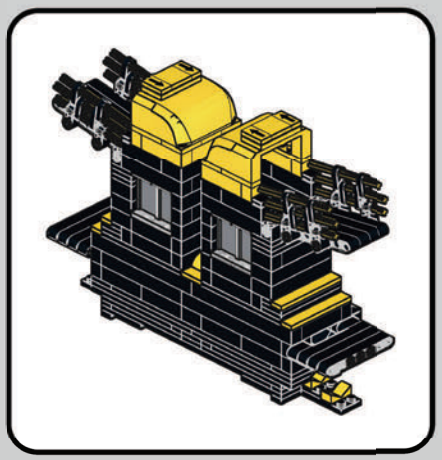

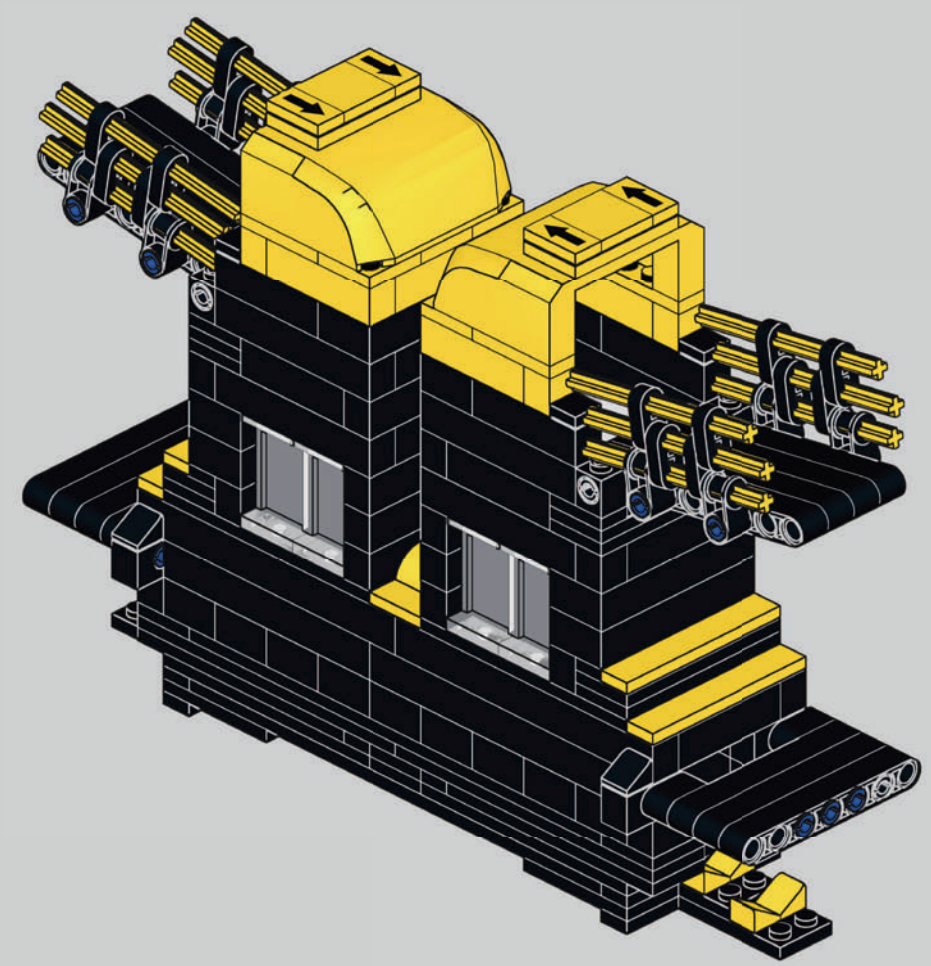

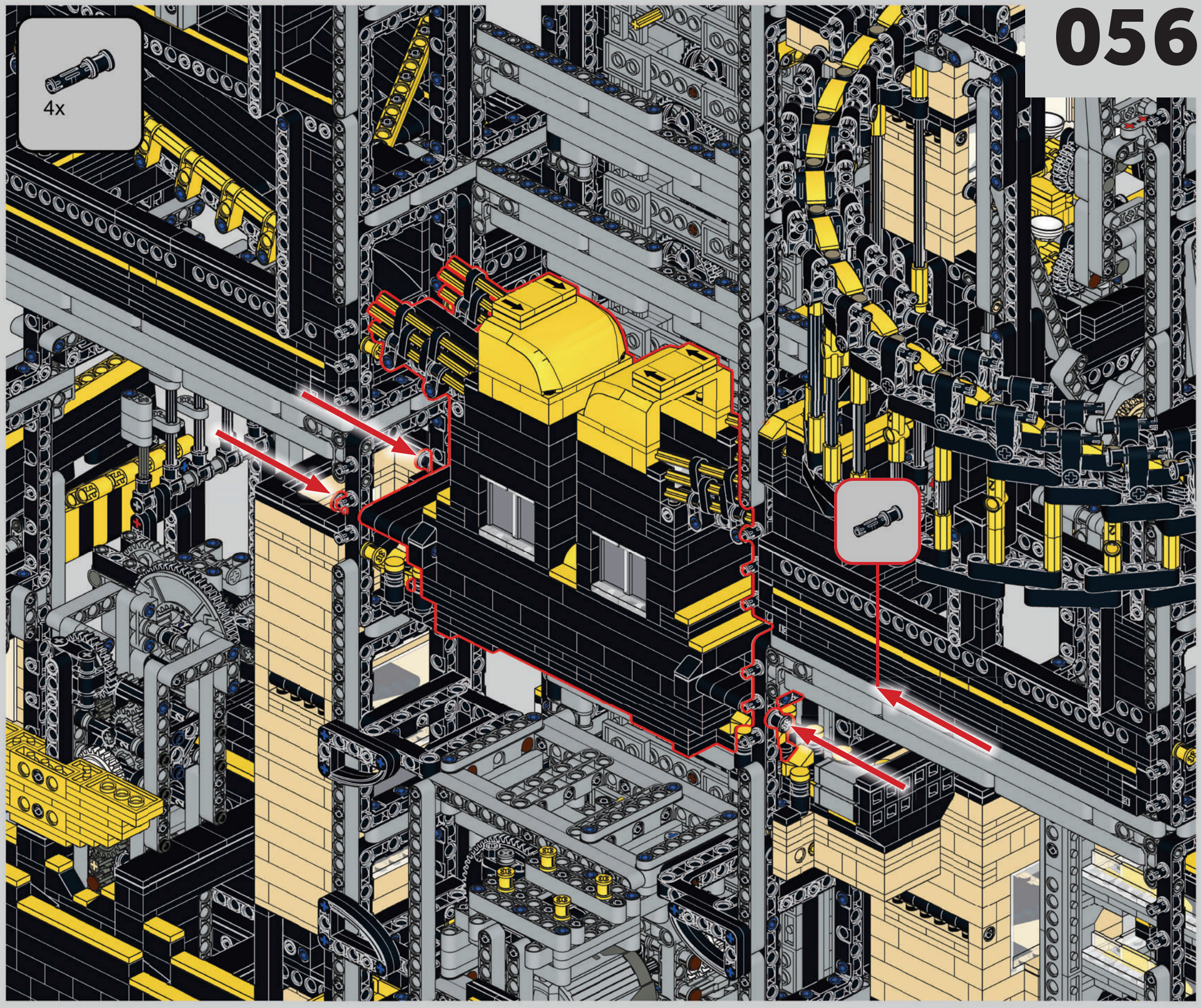
4x

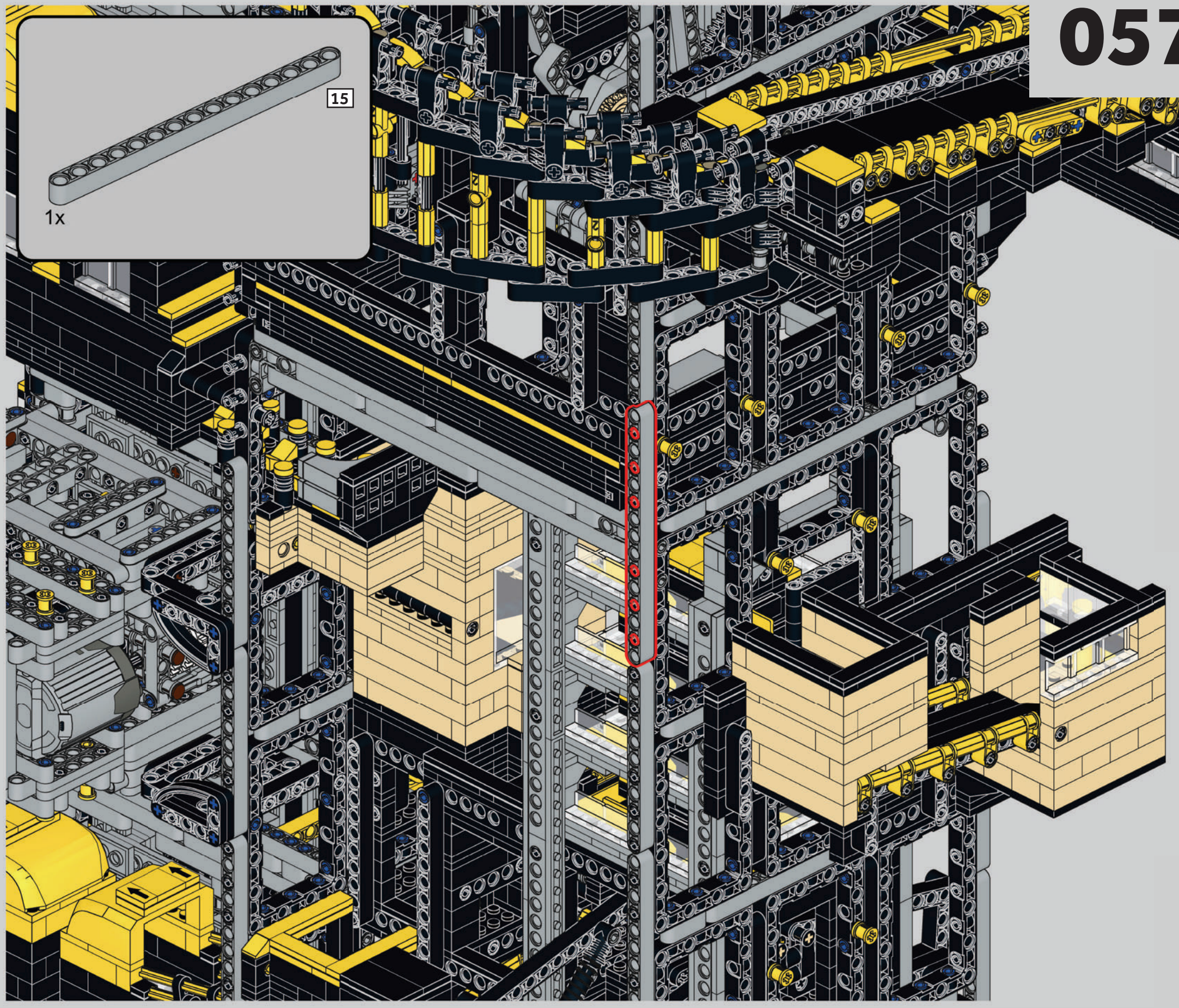
15
1x

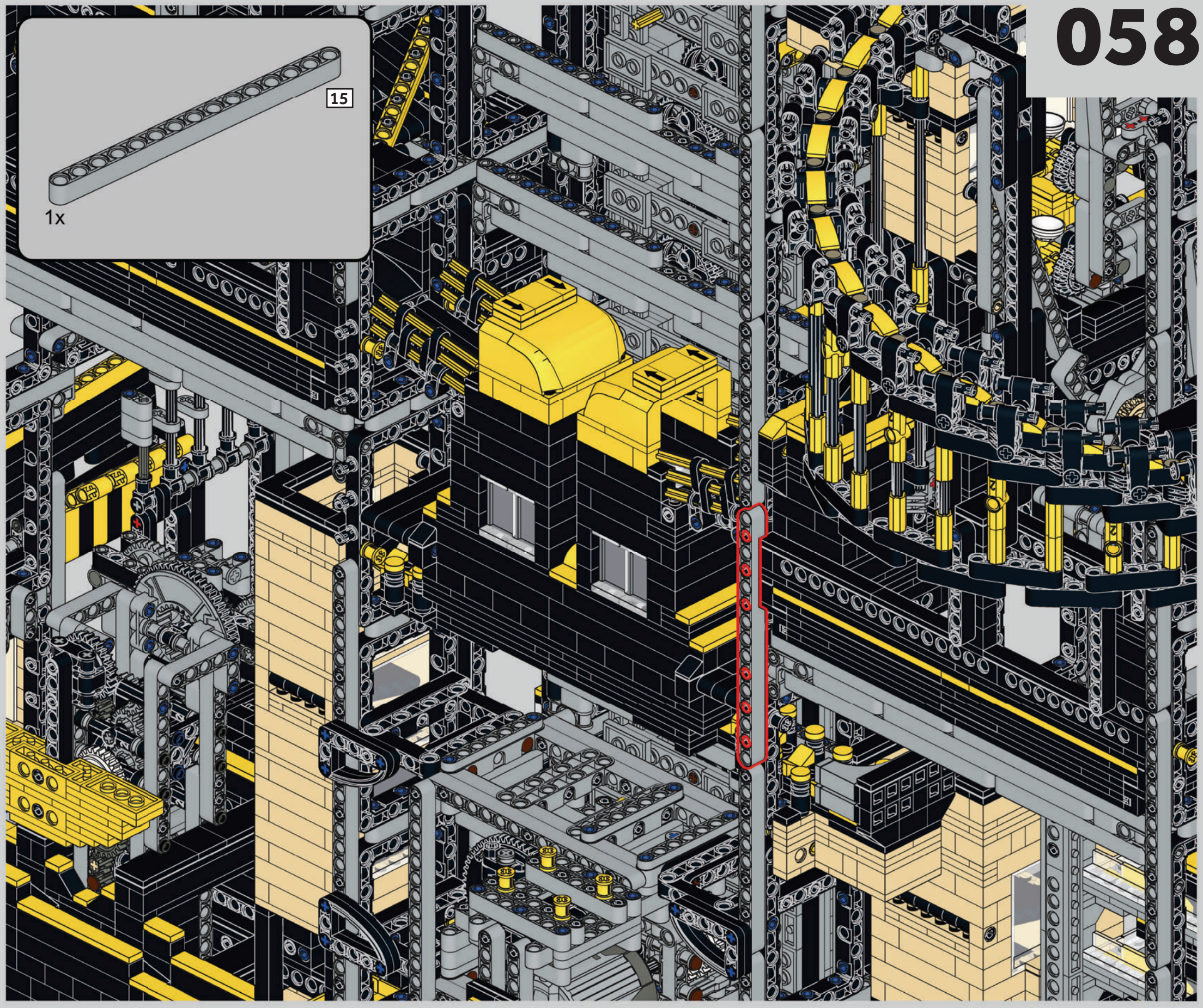
15
1x

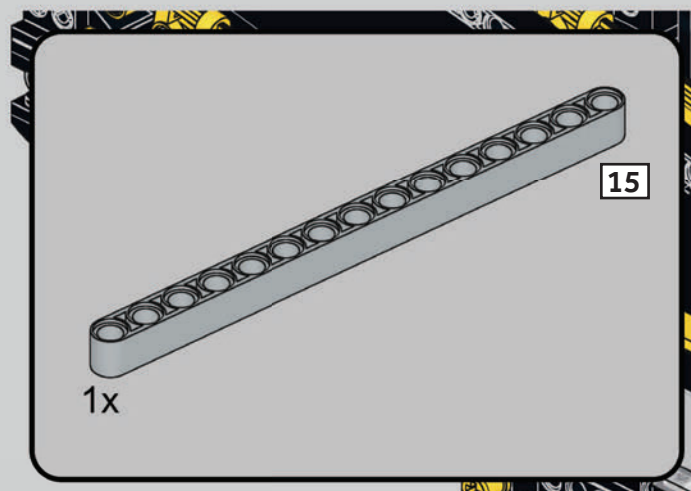
15
1x

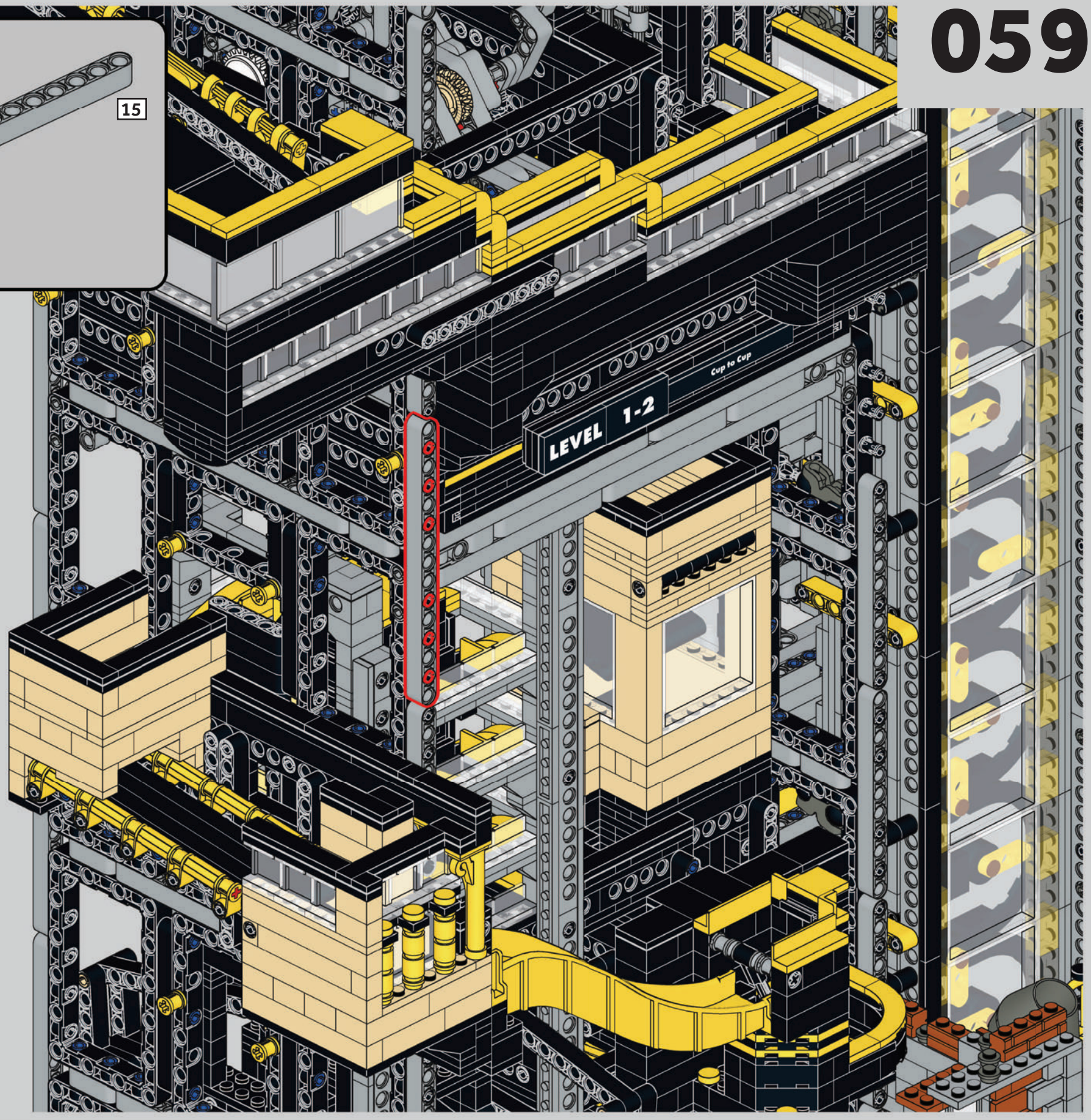
LEVEL 1-2
Cup to Cup

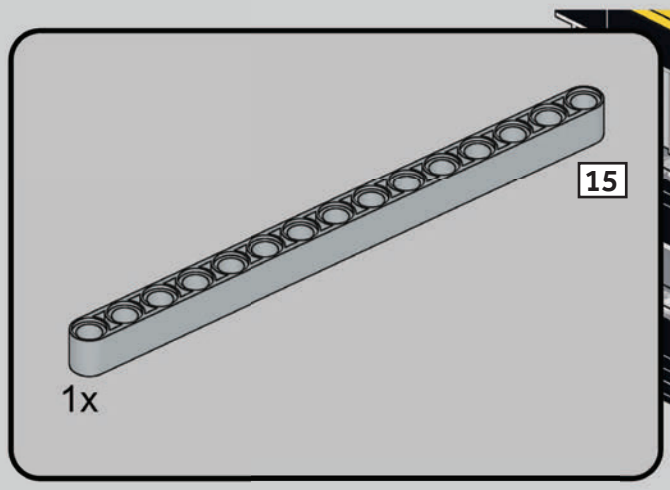
15
1x

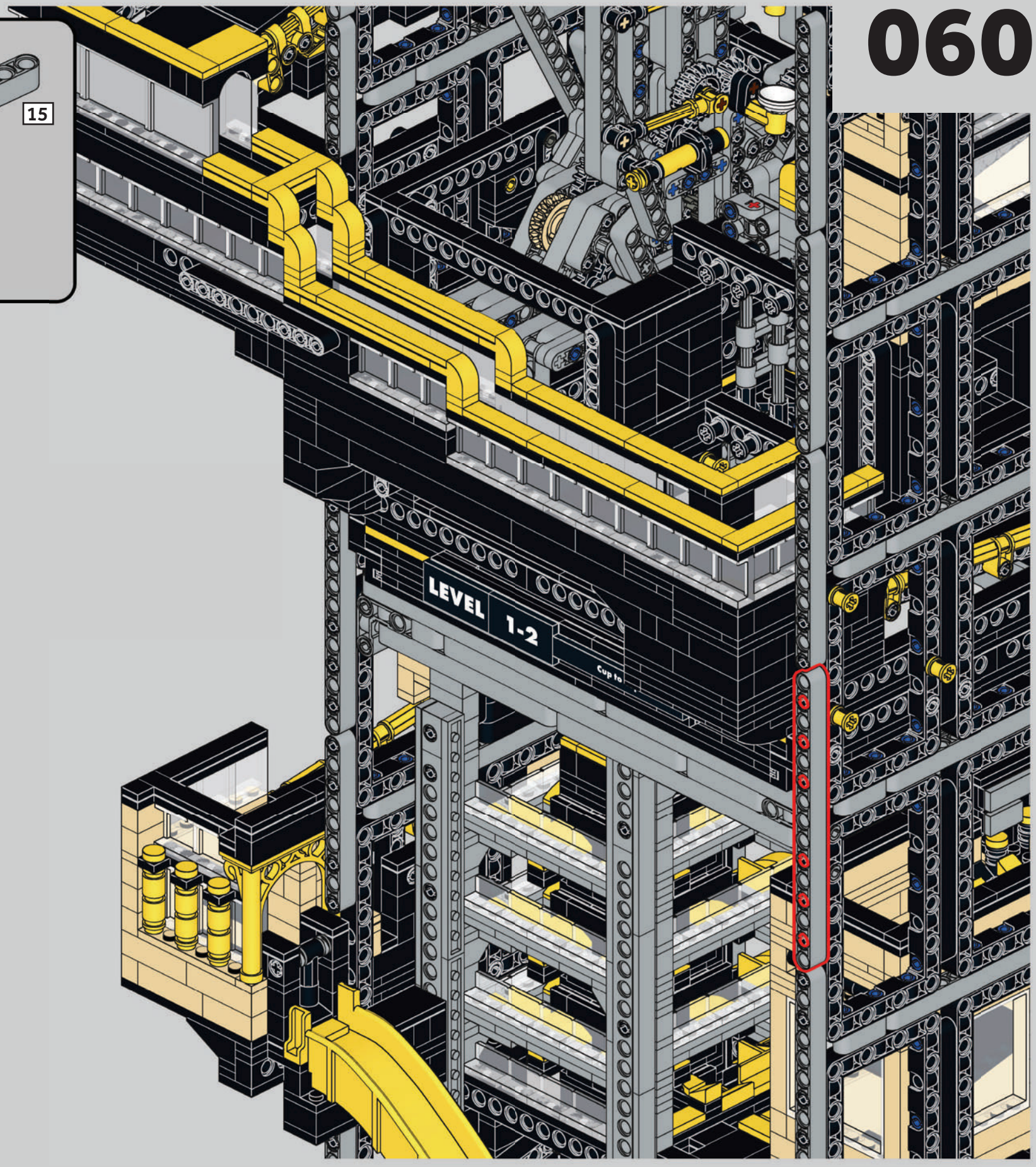
LEVEL 1-2

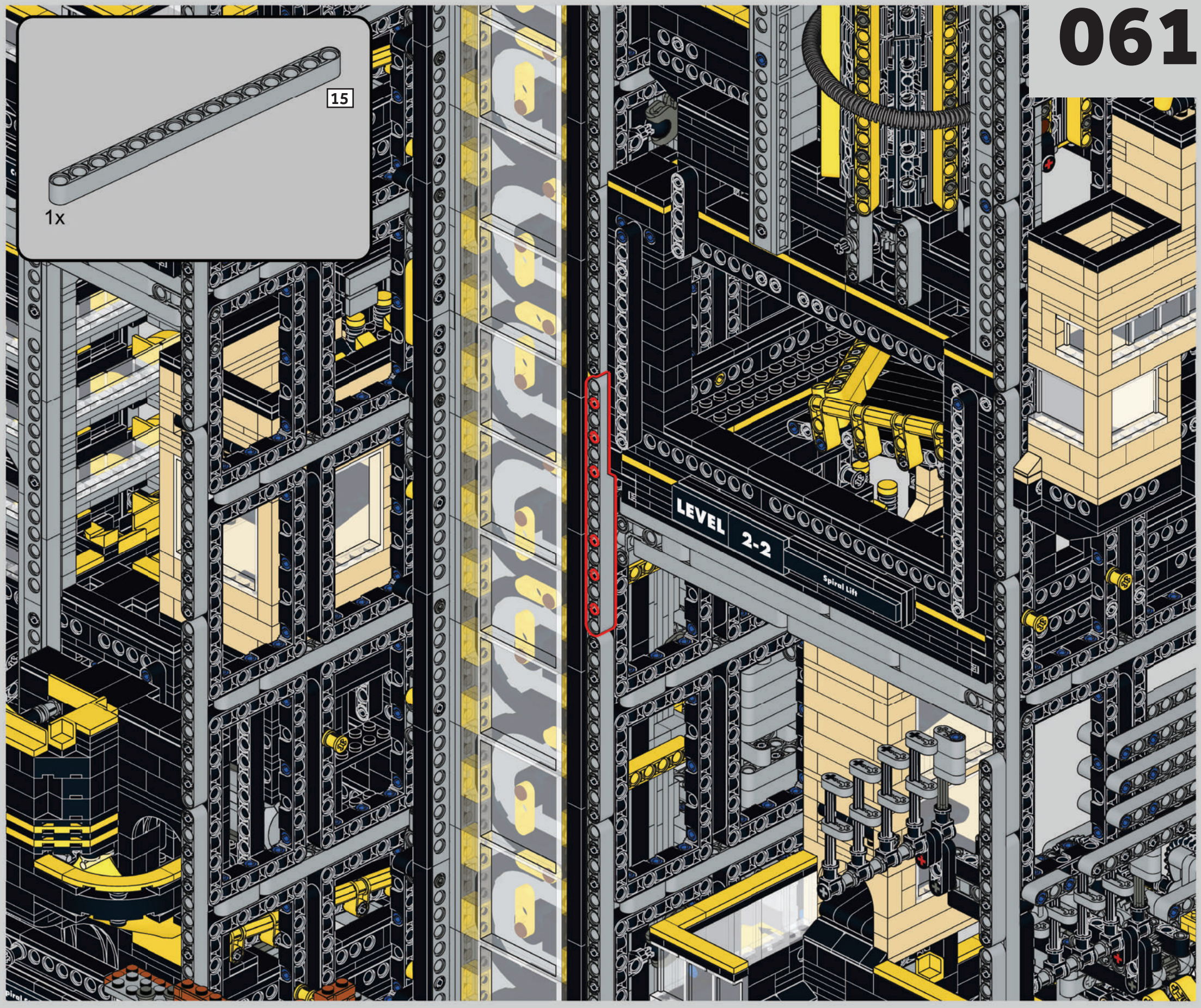
15
1x
LEVEL 2-2
Spiral Lift

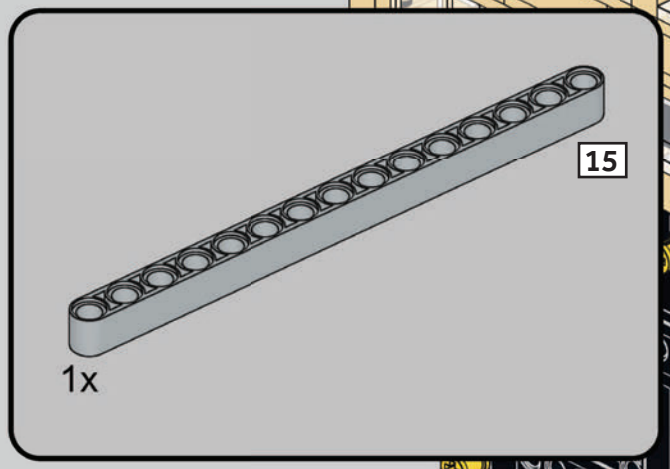
15
1x

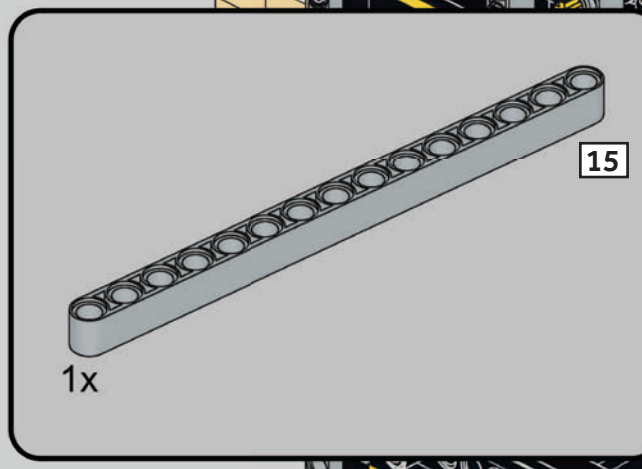
15
1x

064

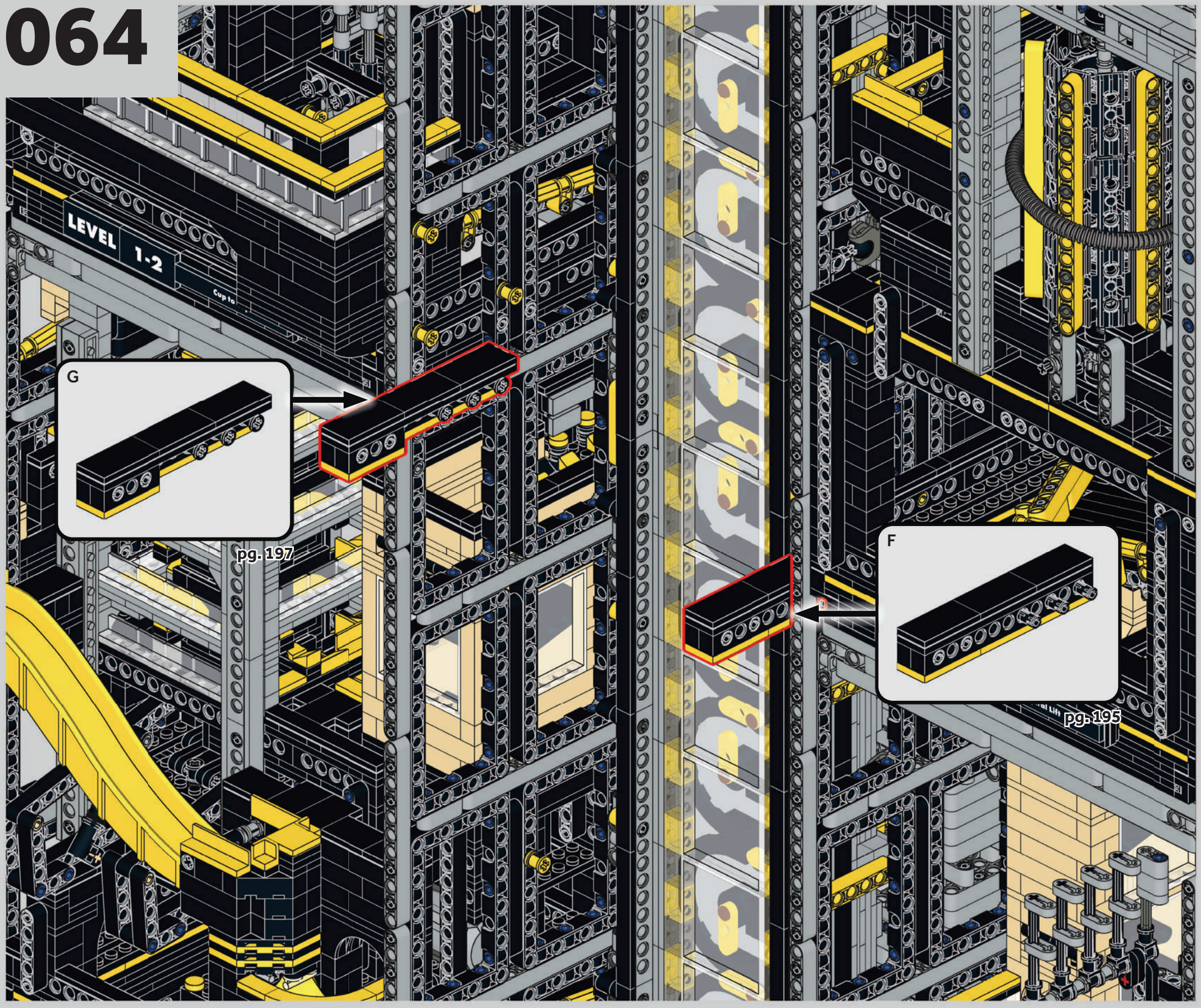

065

D
03

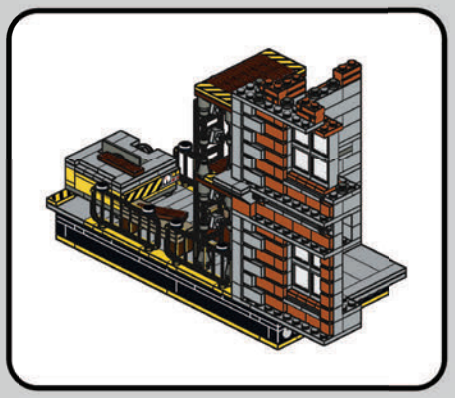

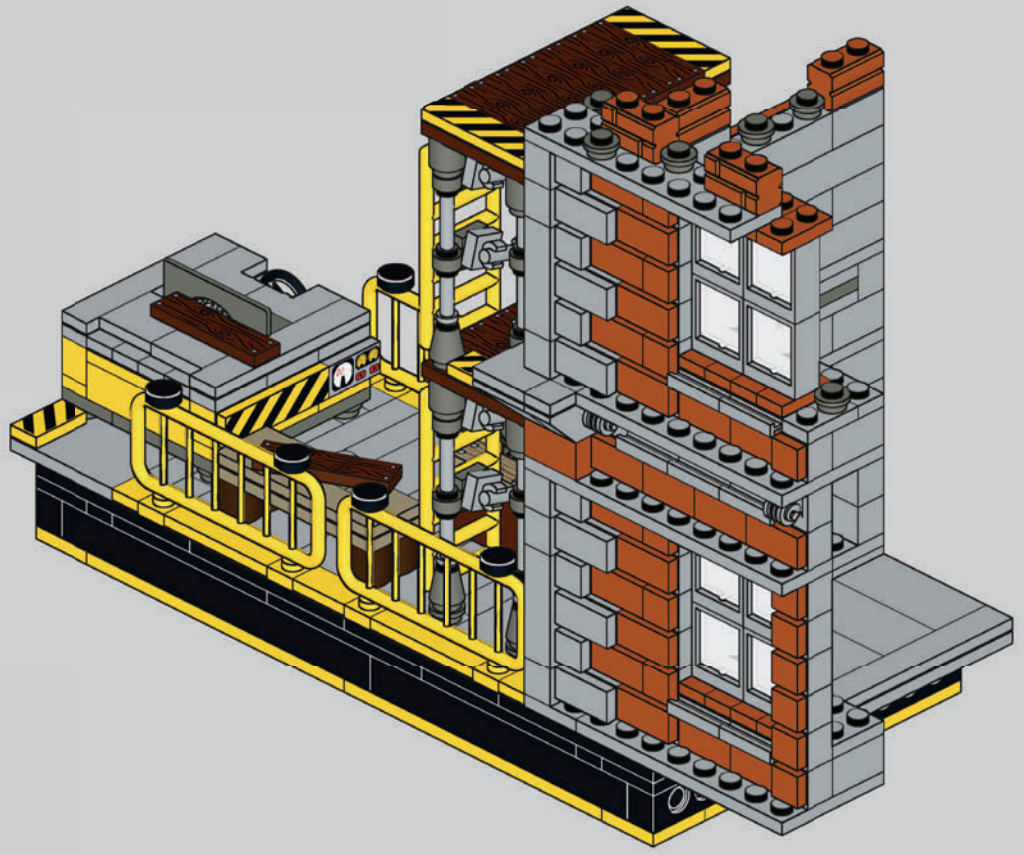

066

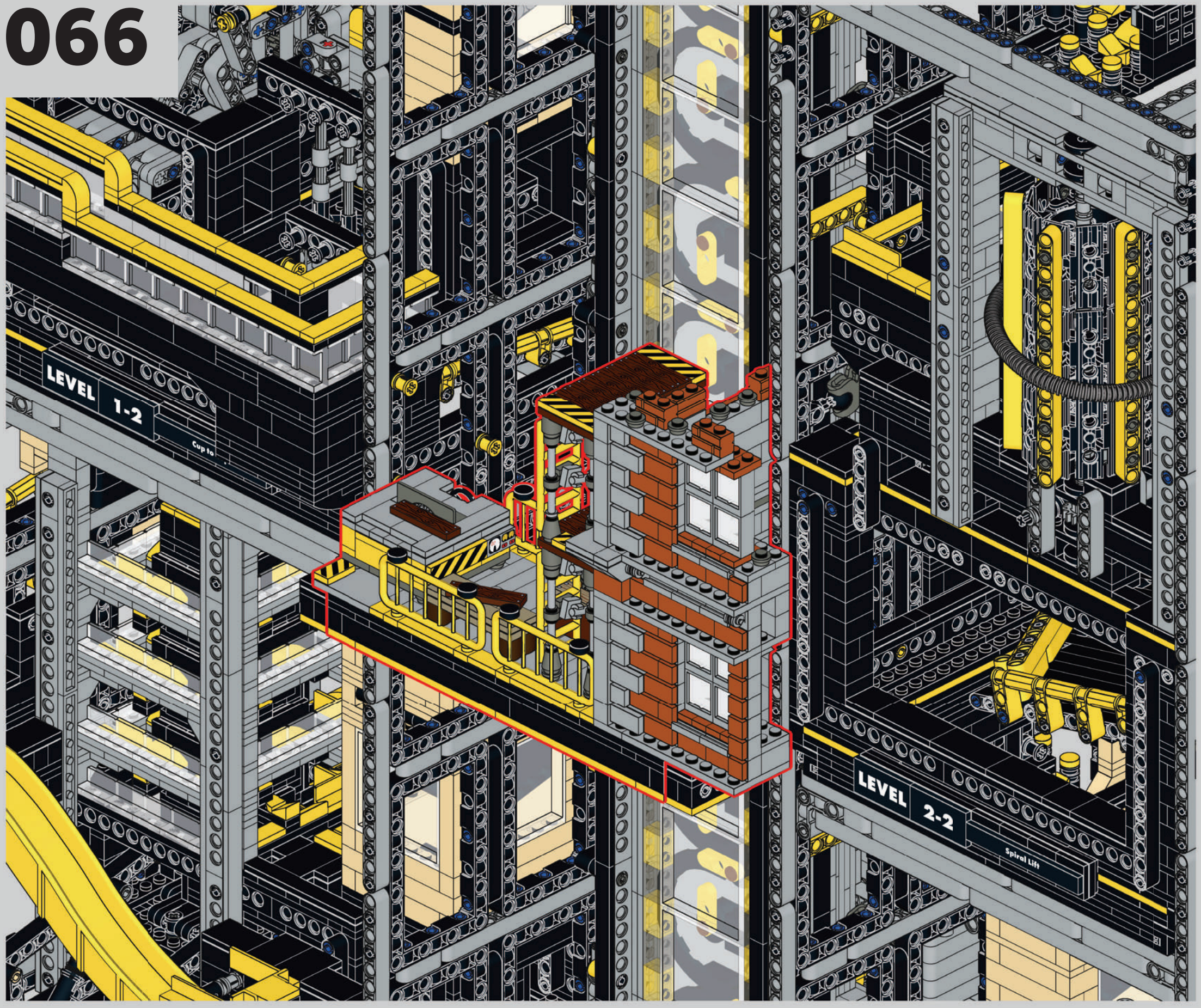

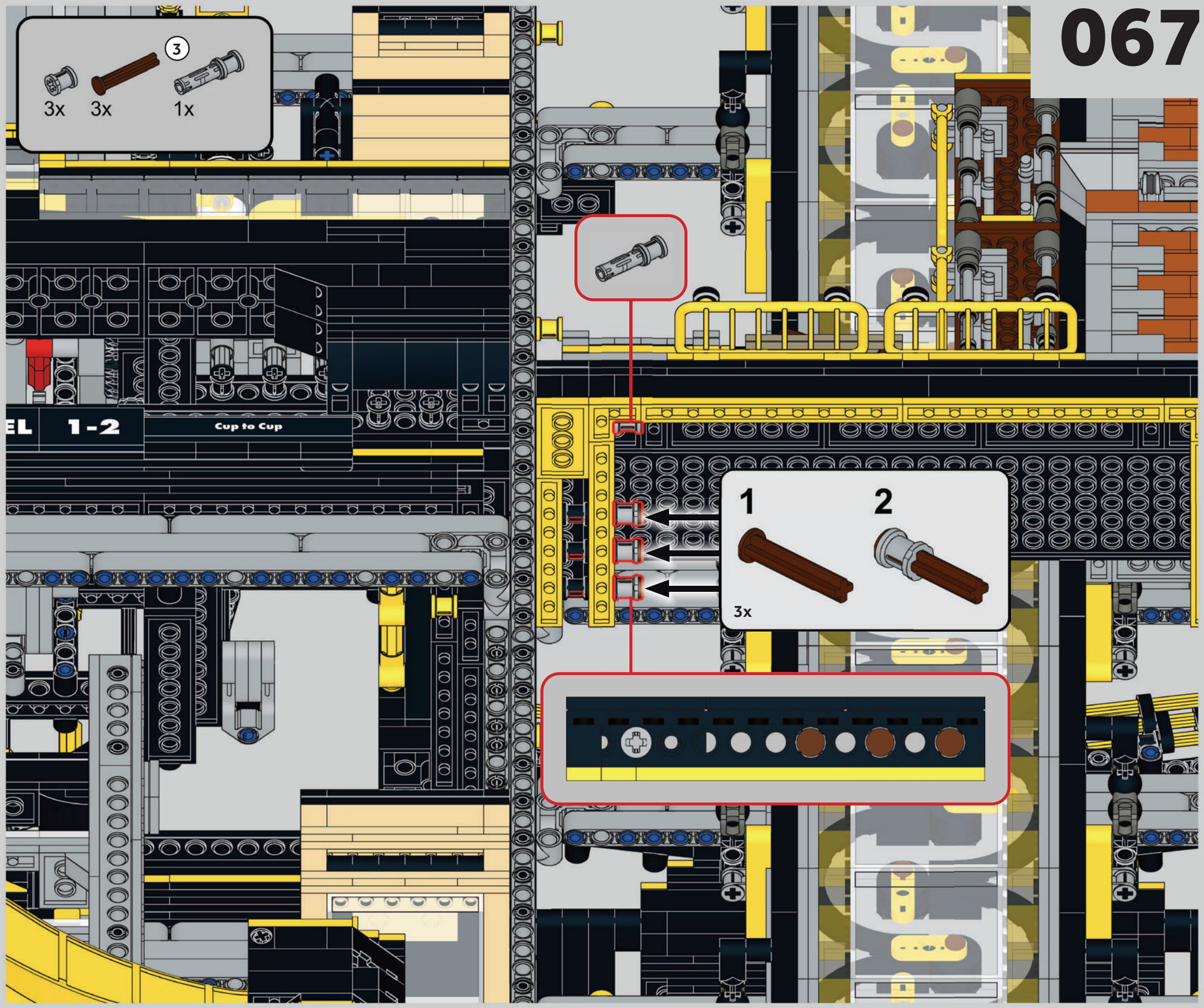
3
3x
3x
1x
1
2
3x
EL
1-2
Cup to Cup

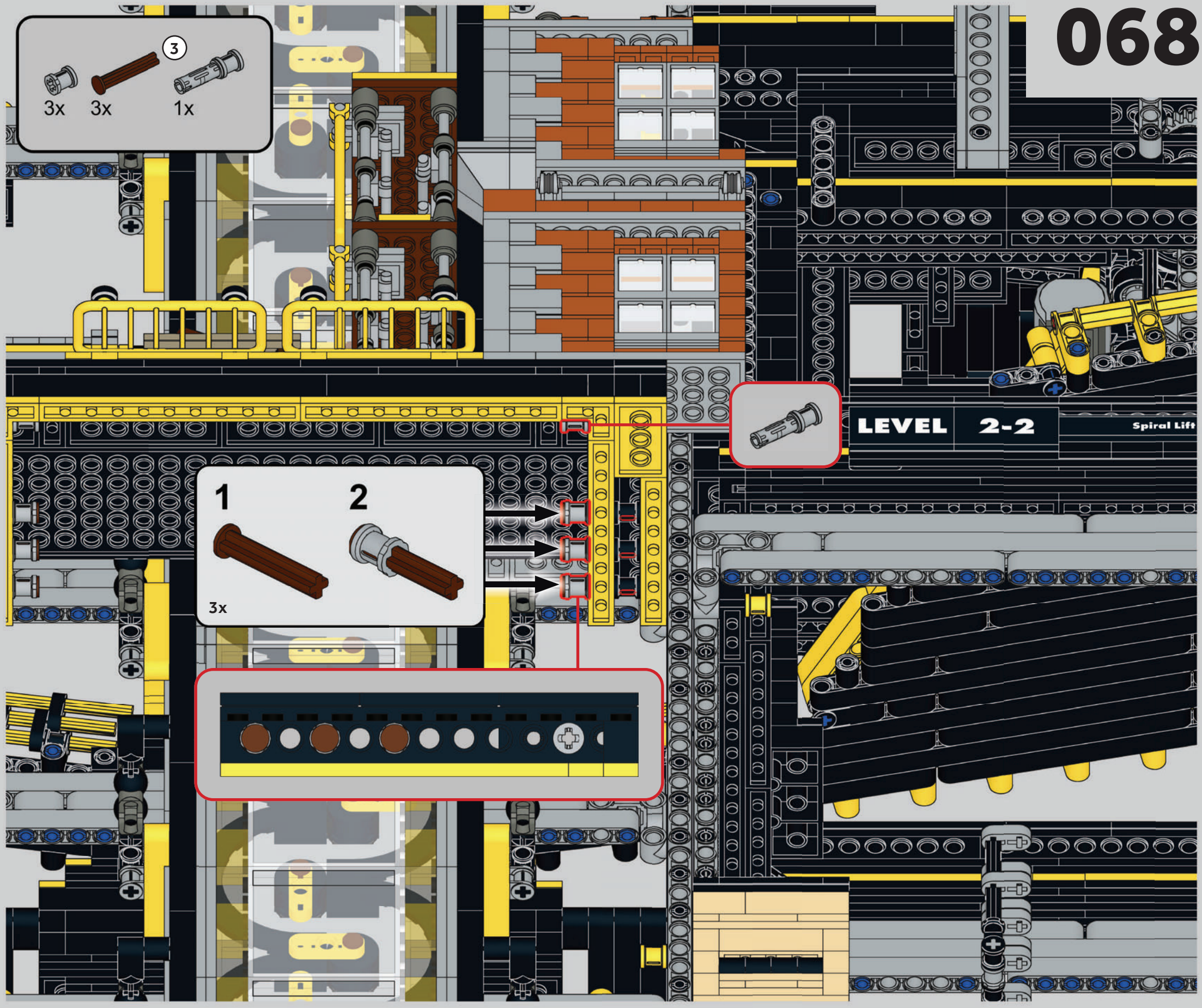
3
3x
3x
1x
1
2
3x
LEVEL
2-2
Spiral Lift

069

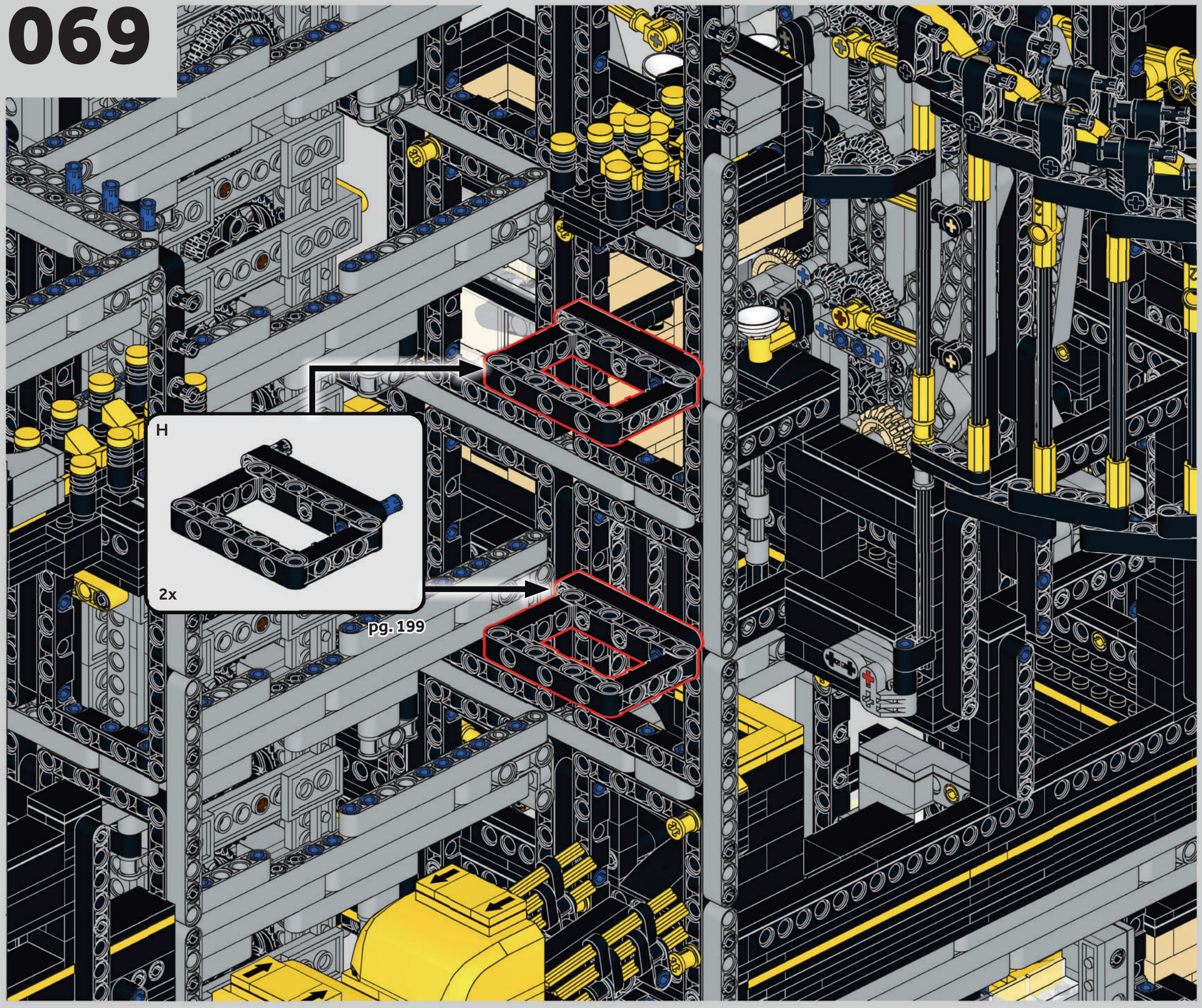

070

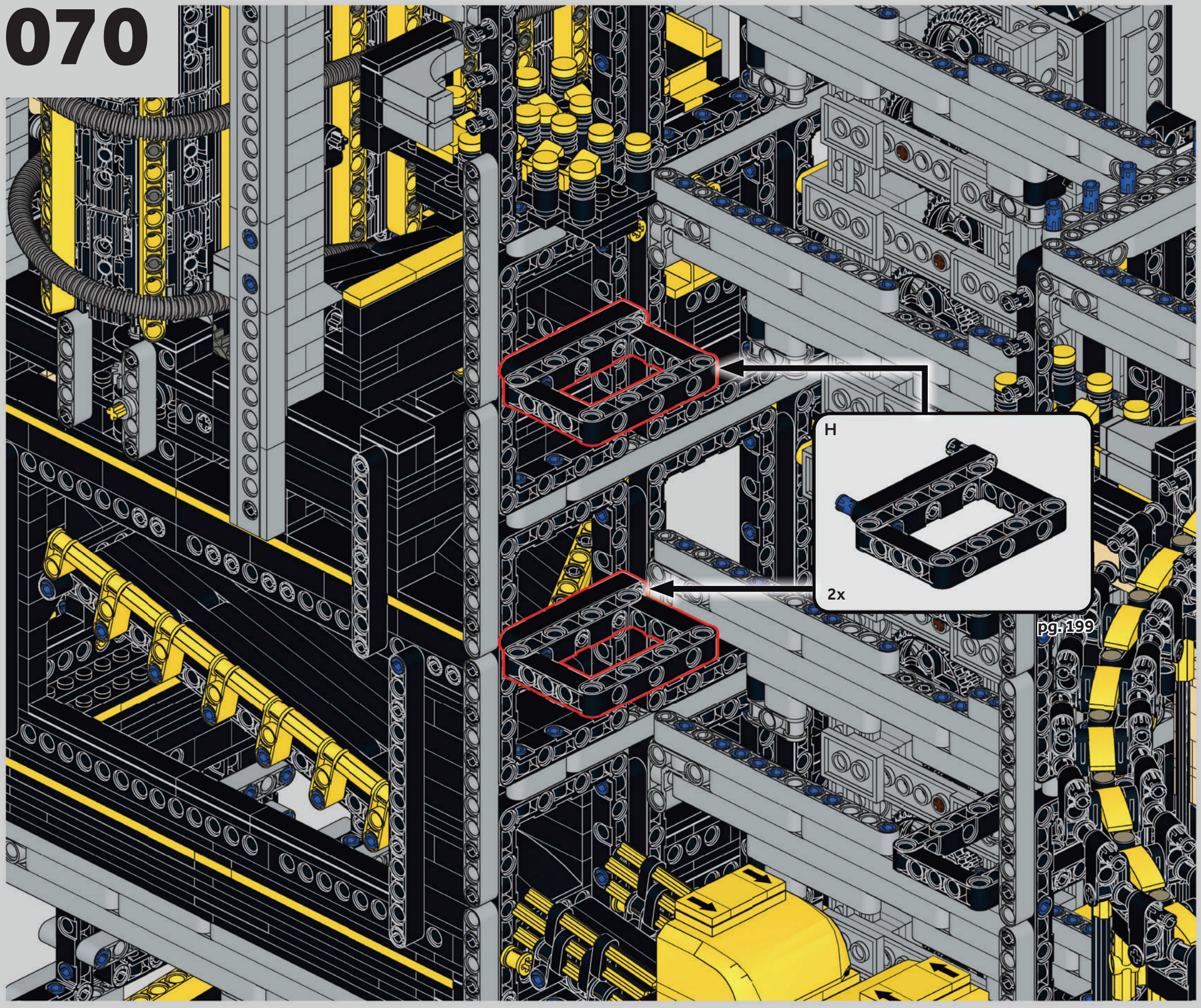

071

S
02

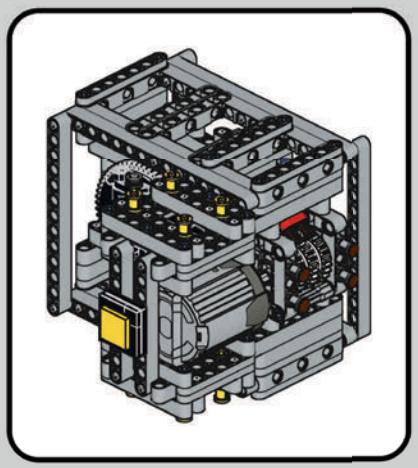

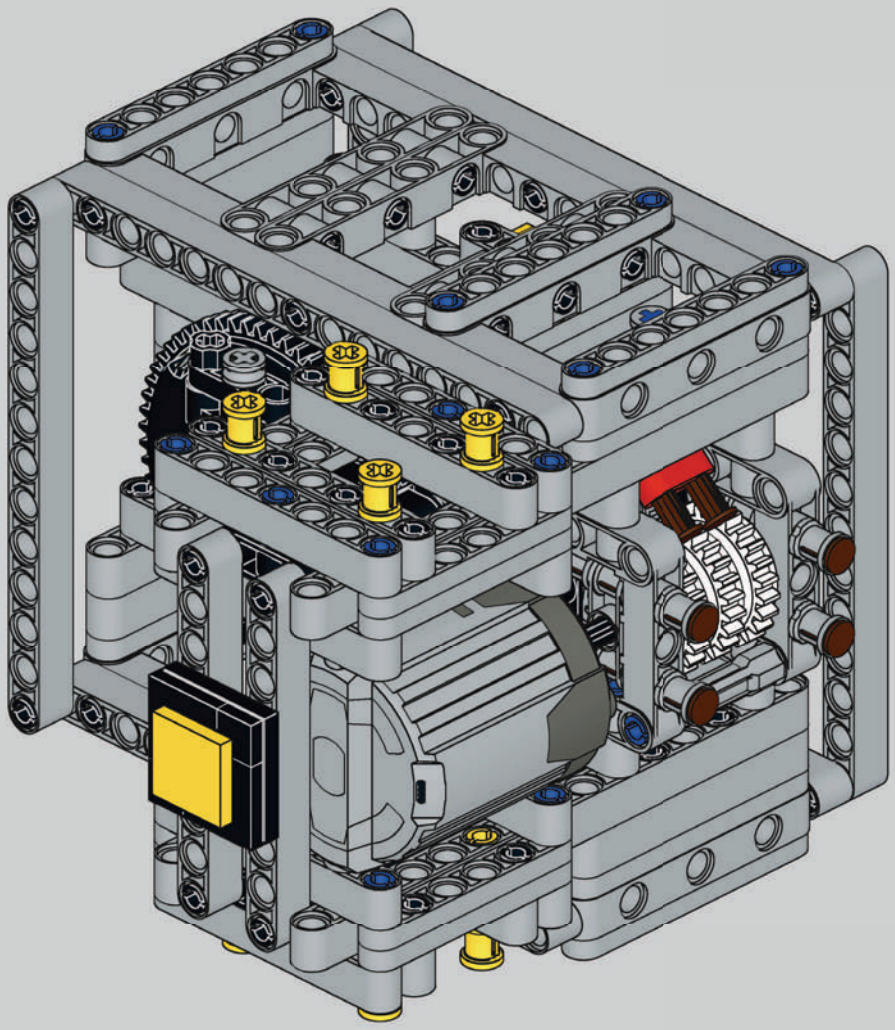

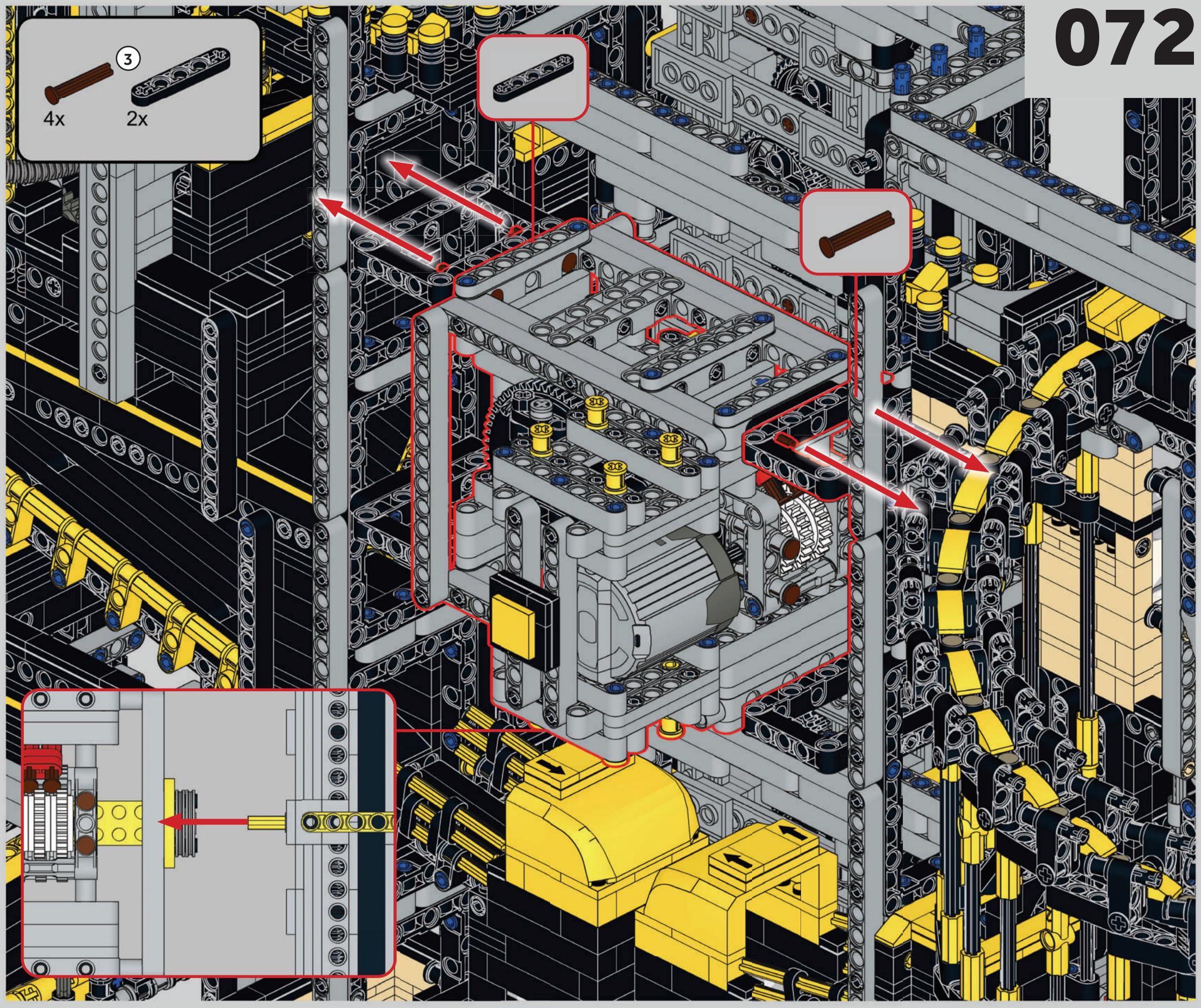
3
4x
2x

073

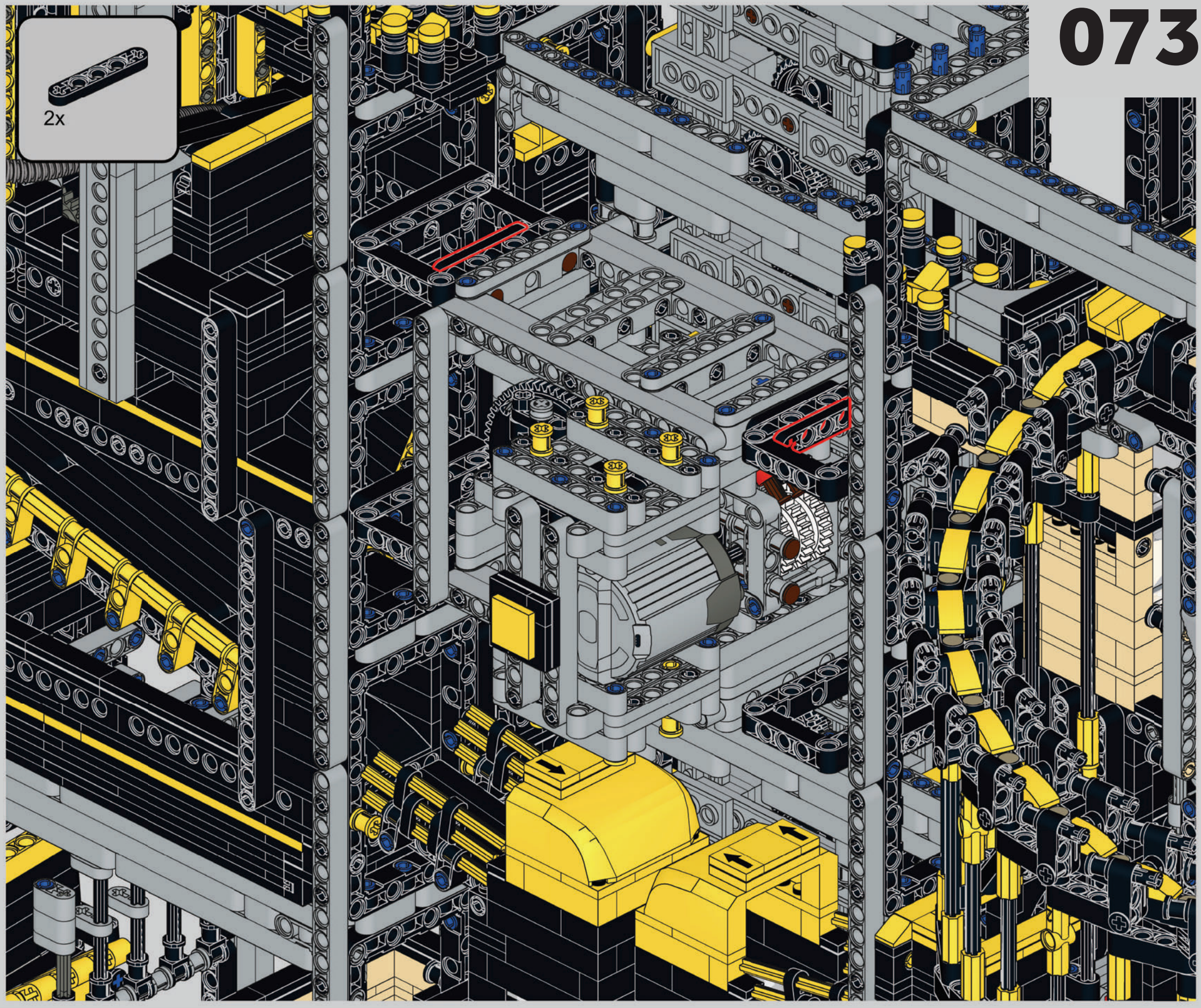

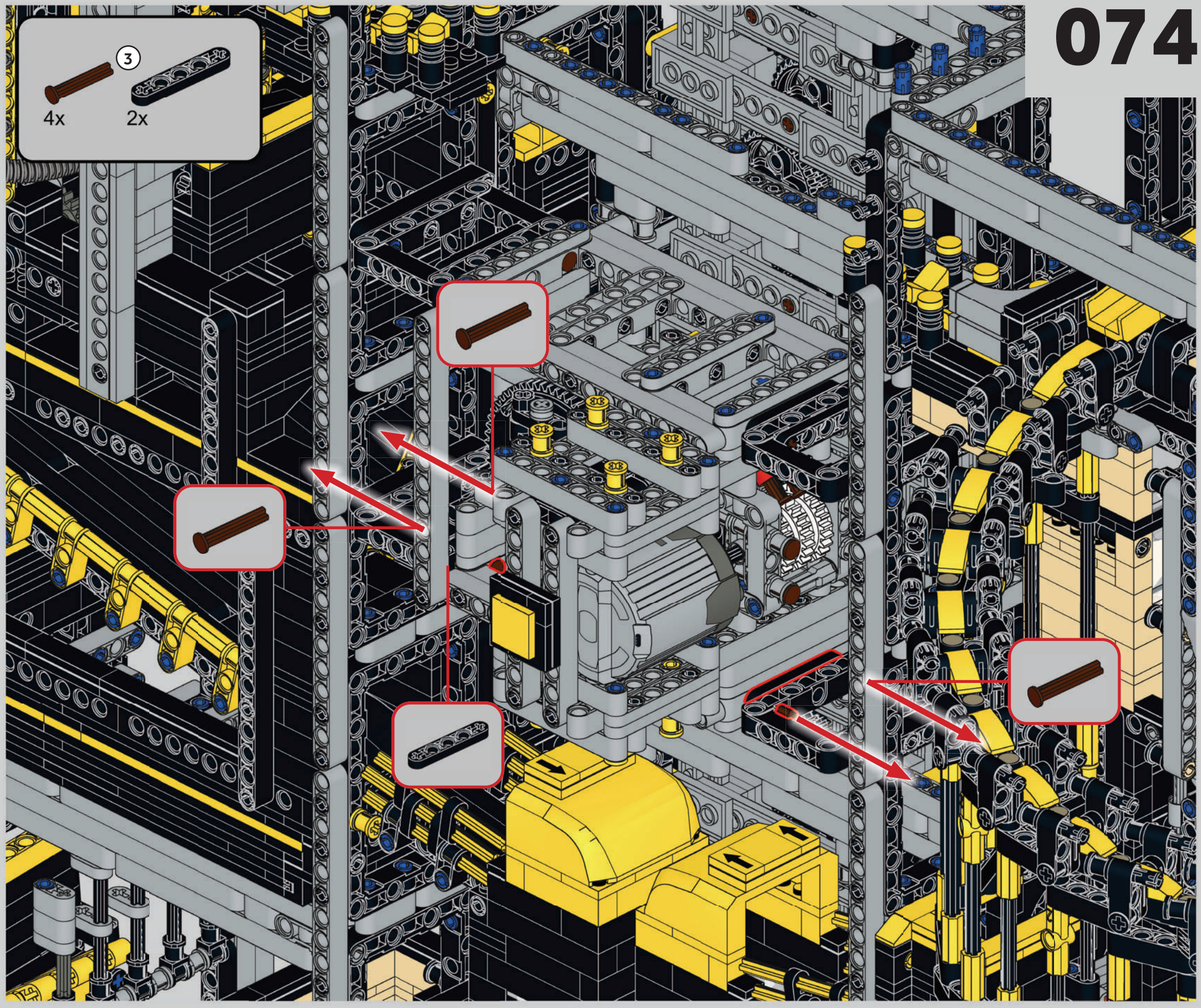
3
4x
2x

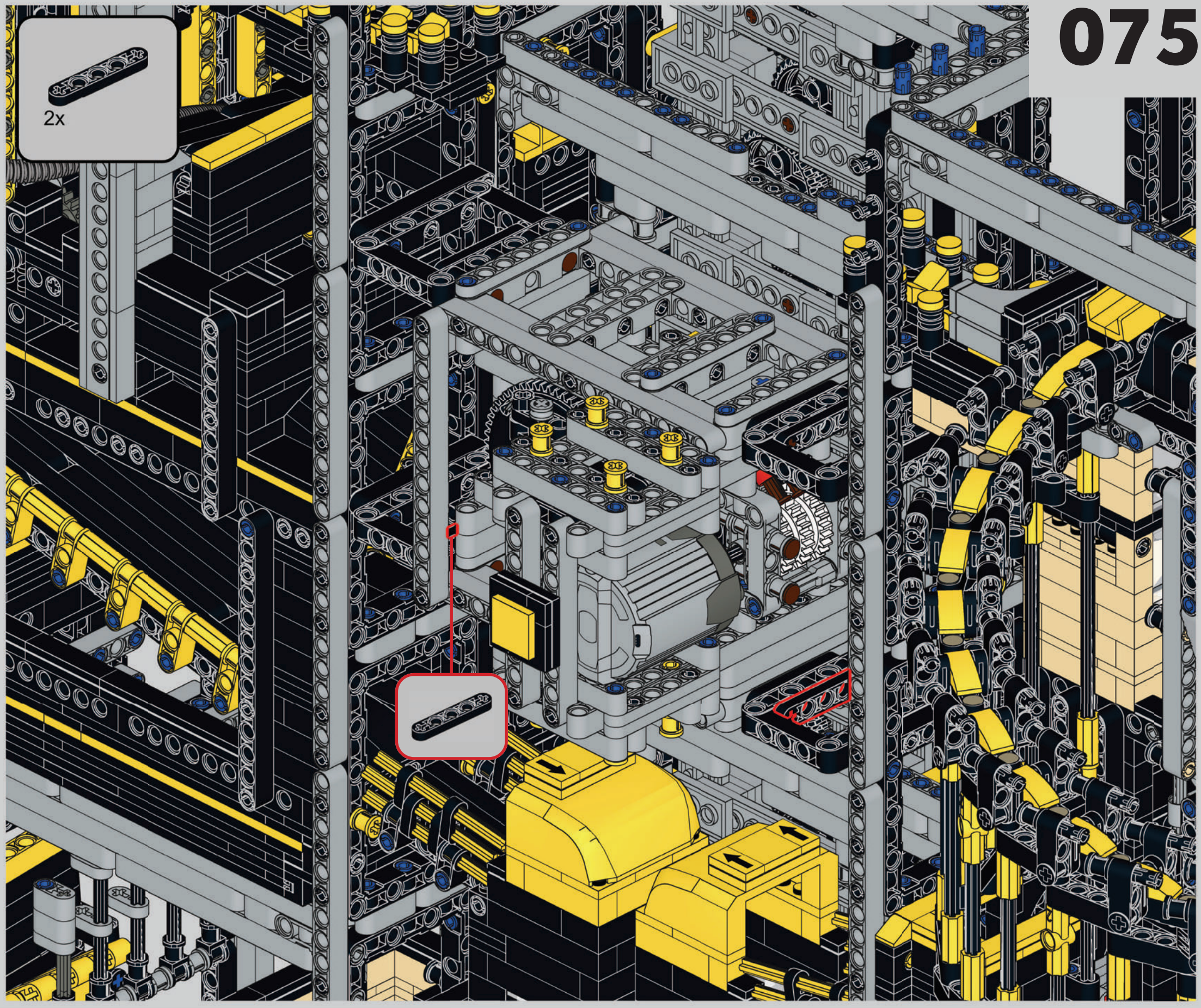
2x

076

J

2x

pg. 201

I

2x

pg. 200

077

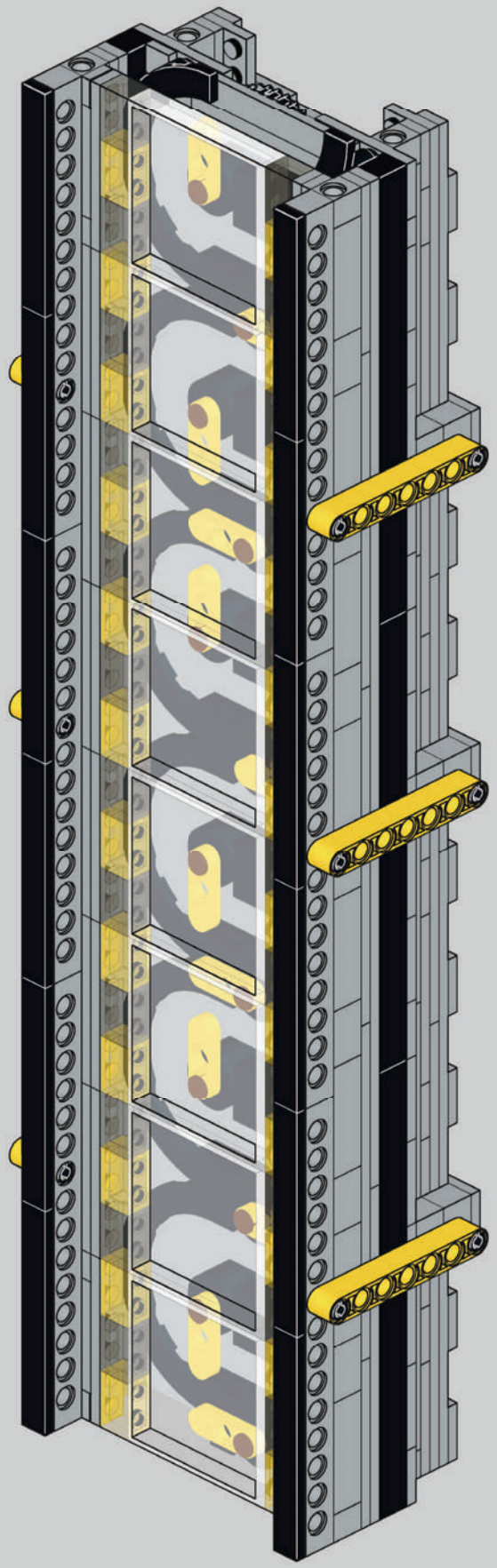

S
01

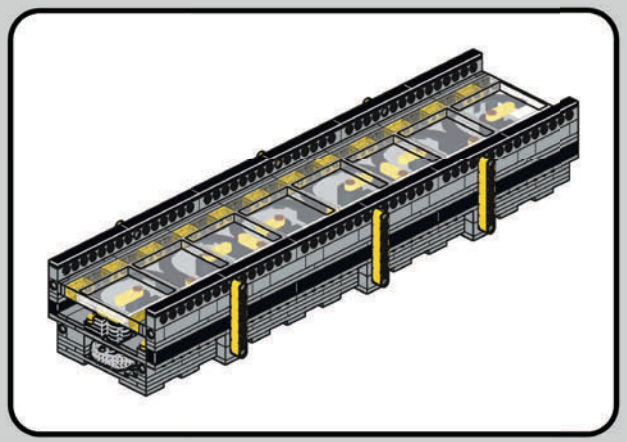

078

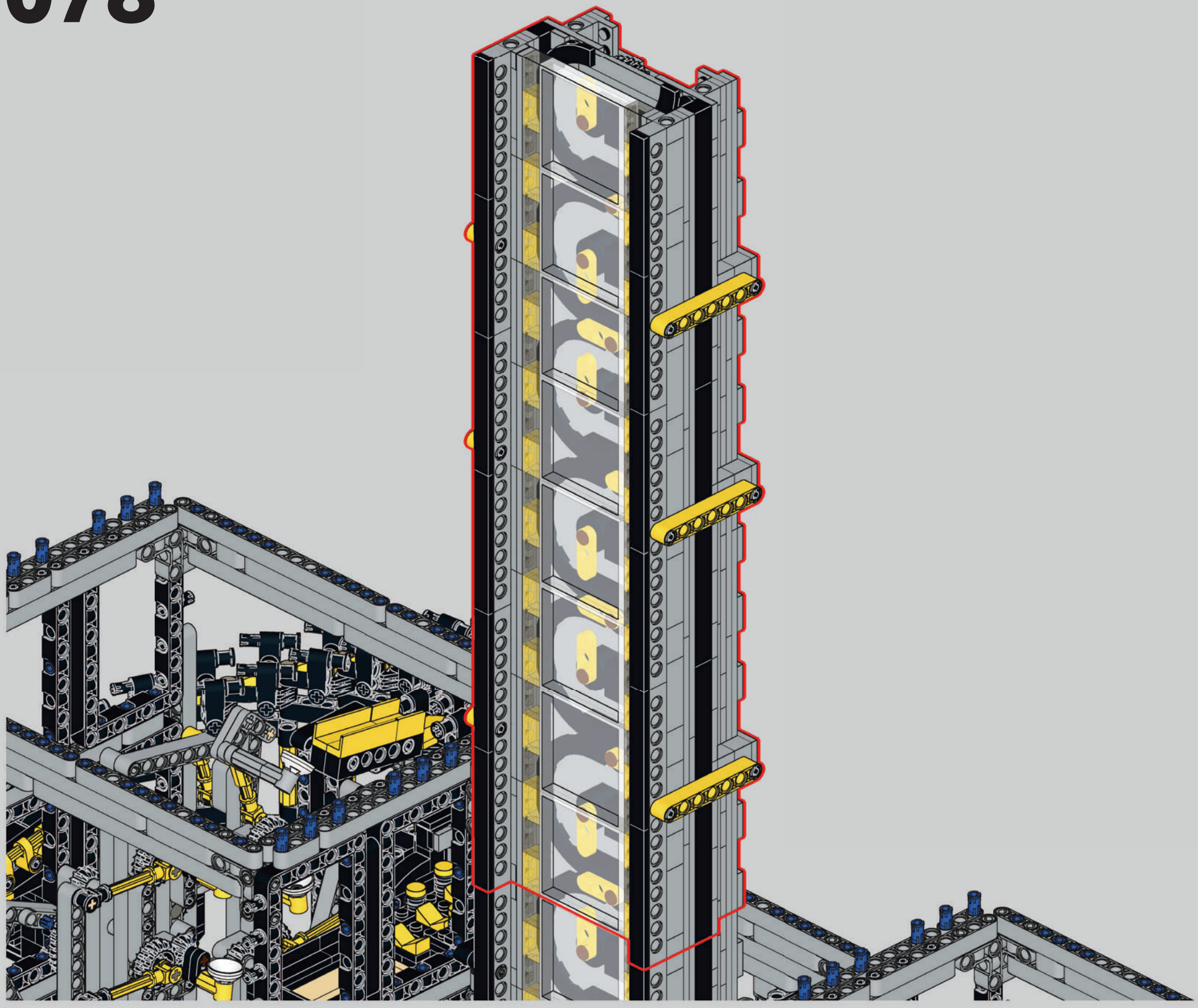

079

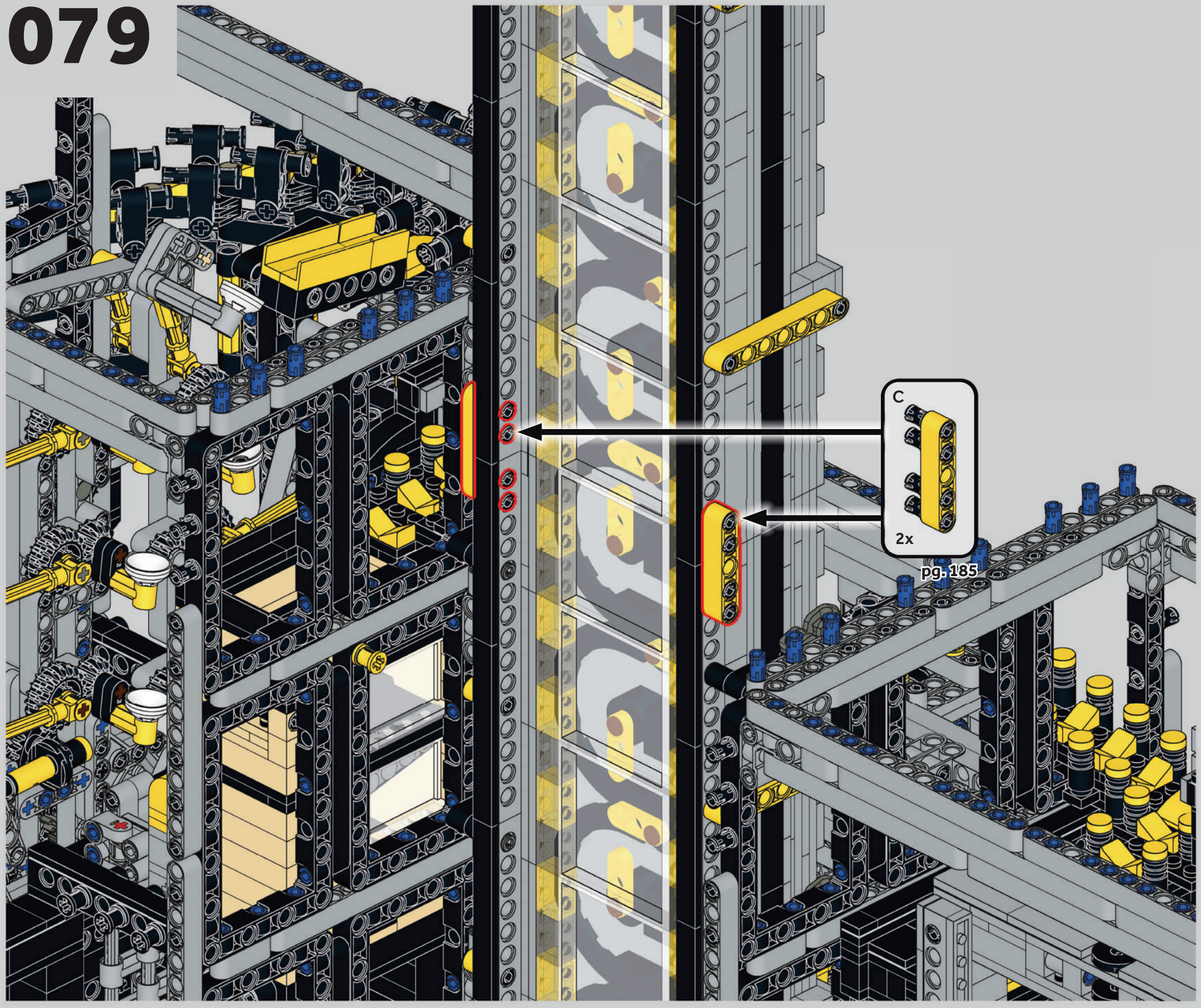

080

M
06

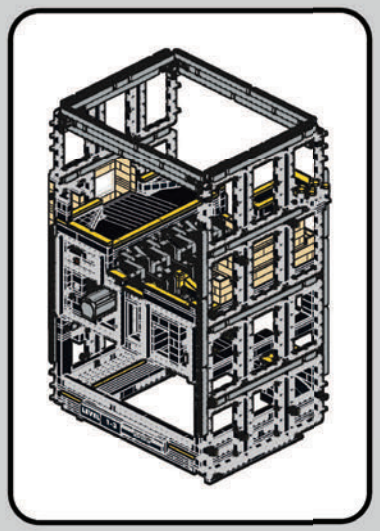

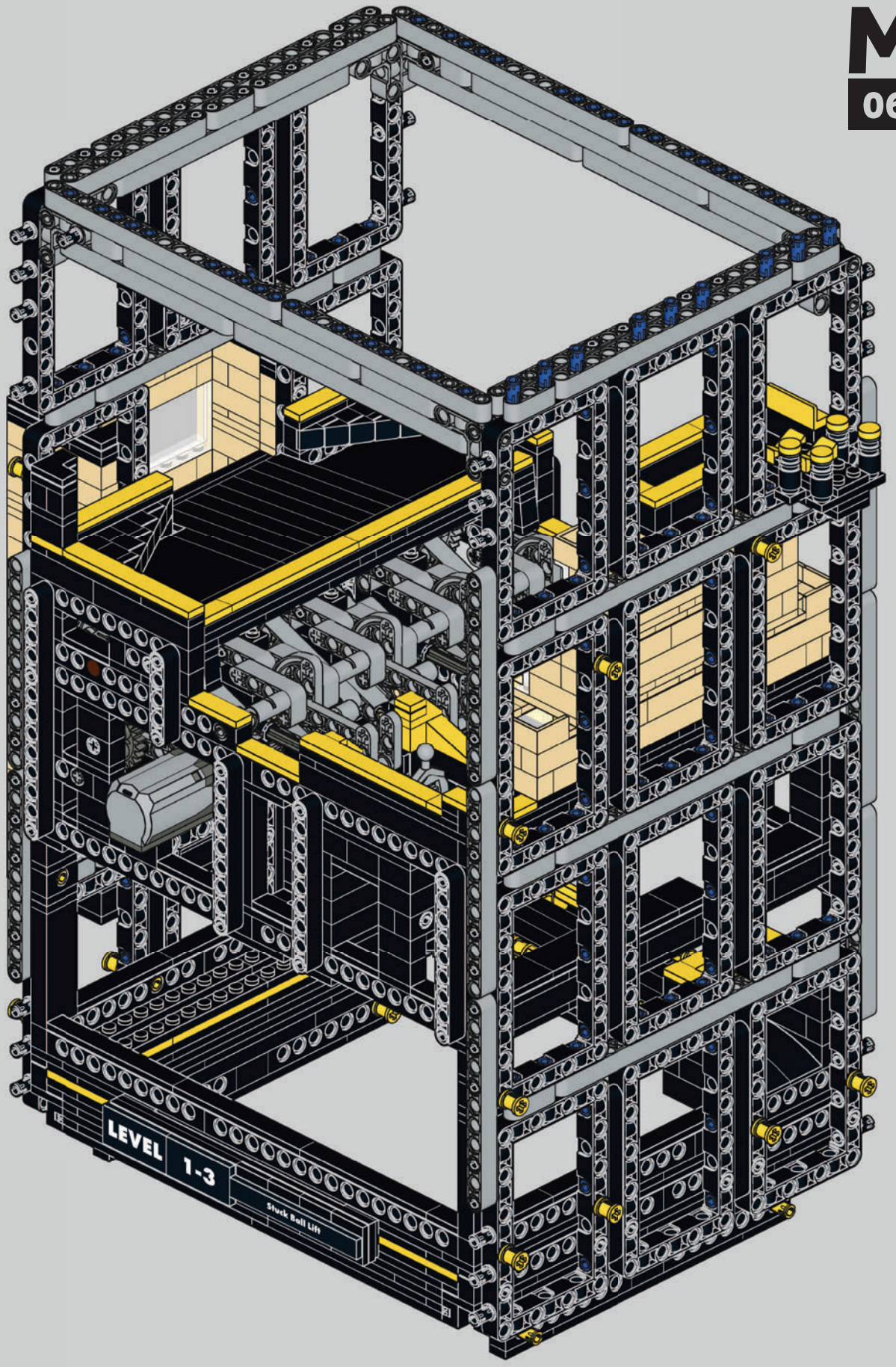

081

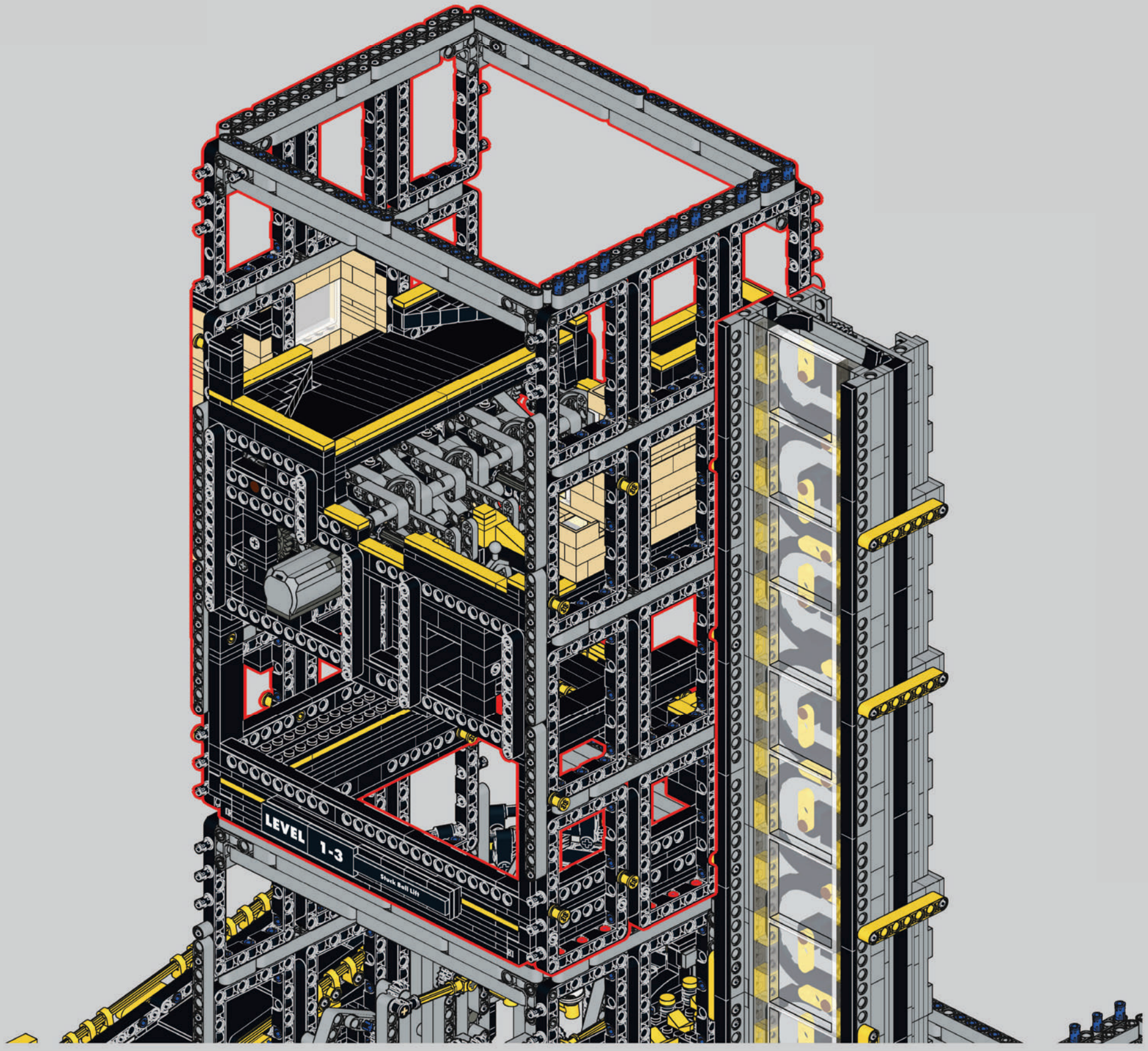

082

M
07

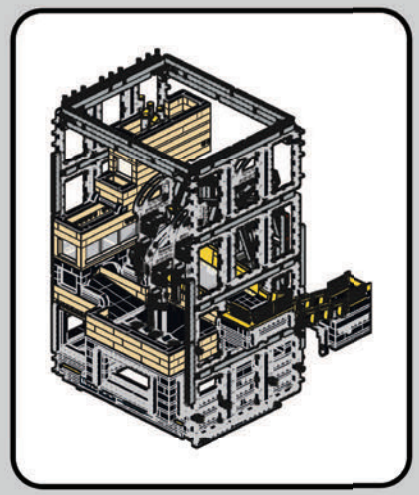

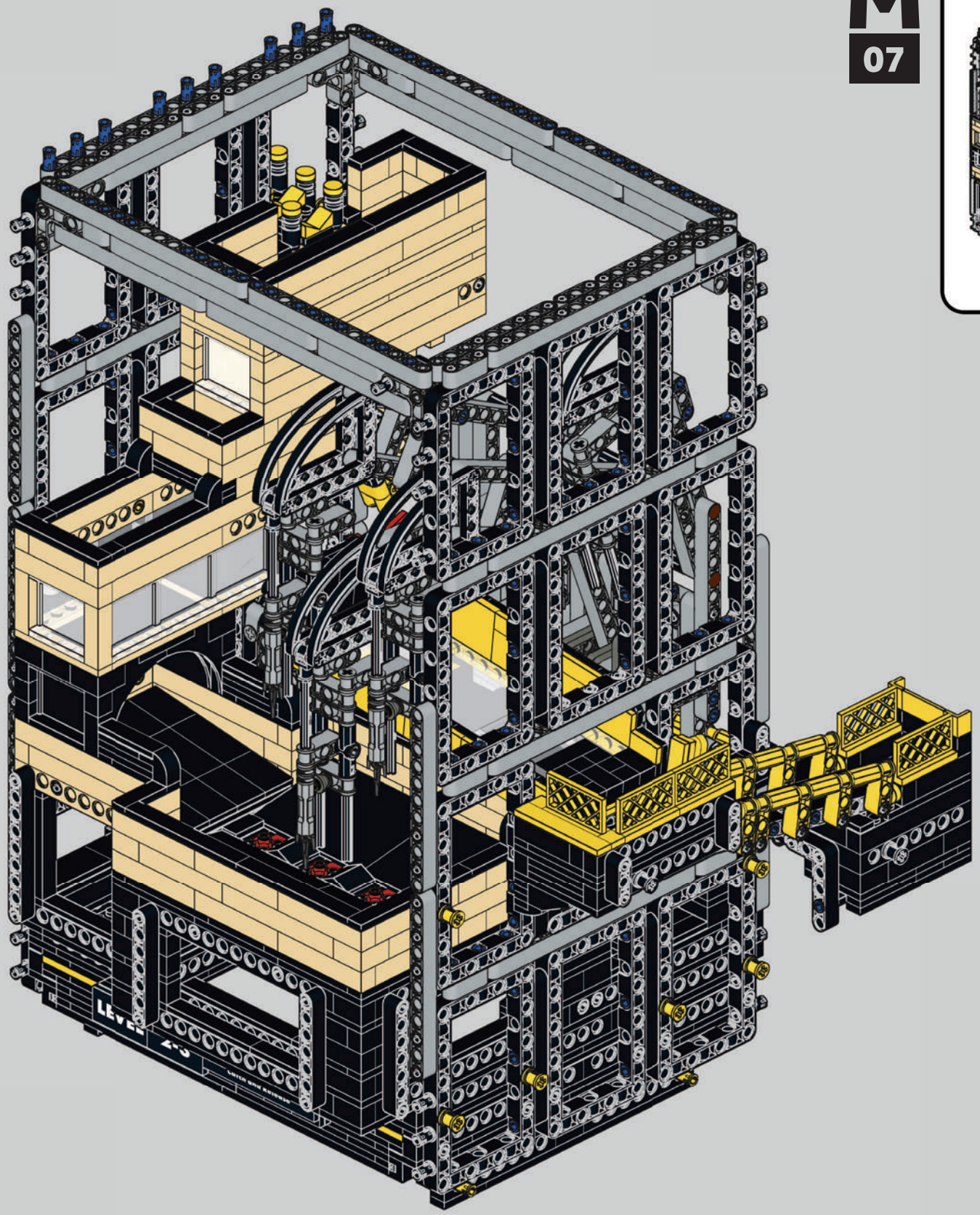

083

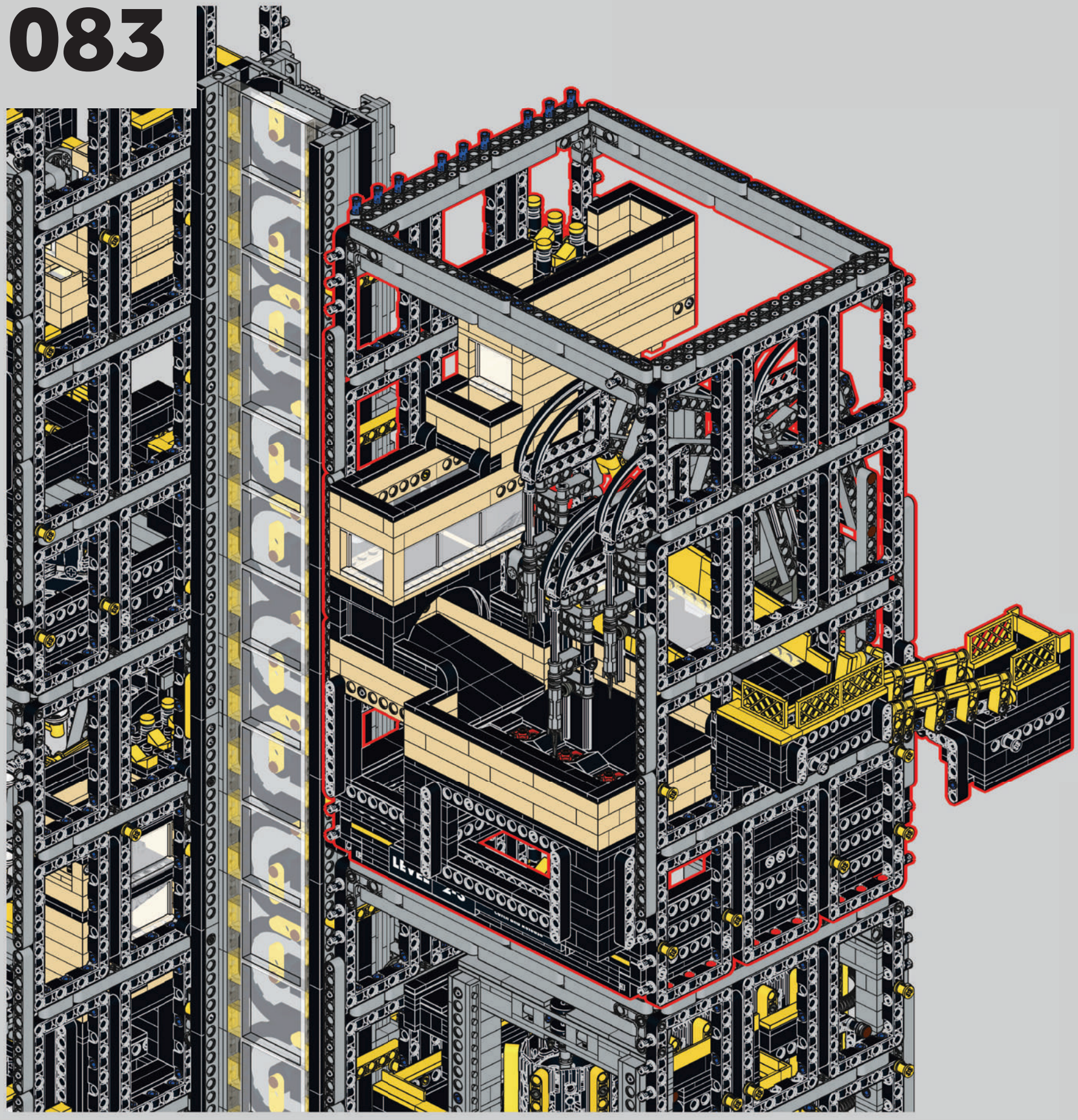

084

A
01

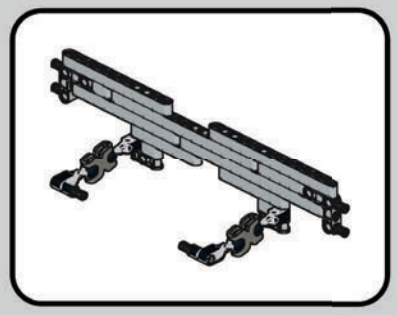

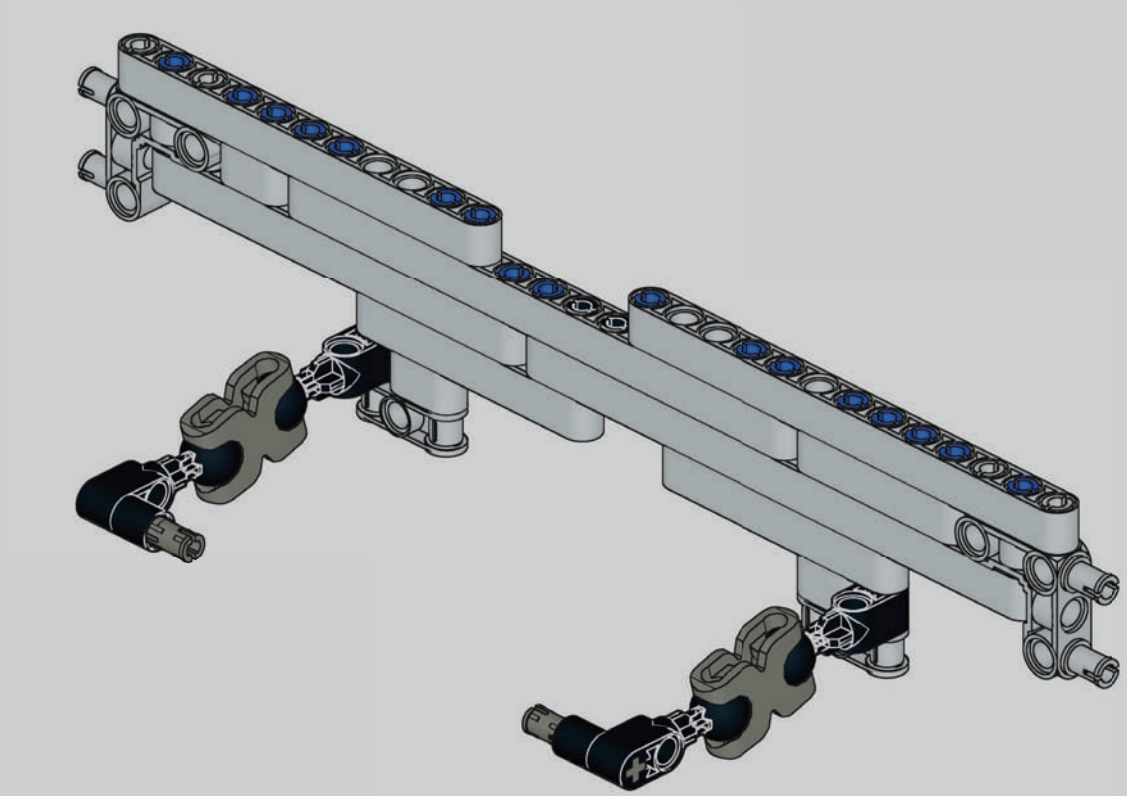

085

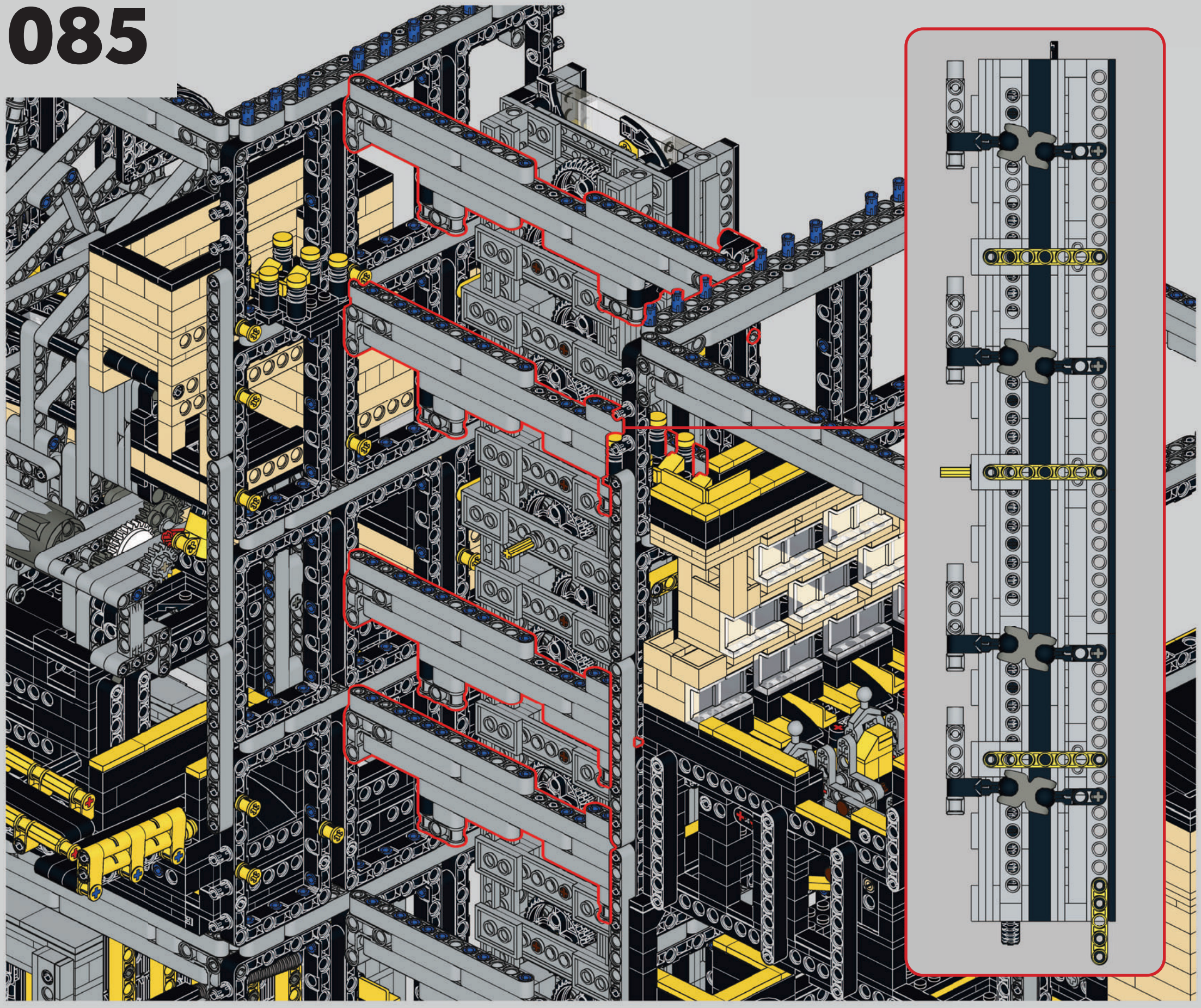

086

R
01

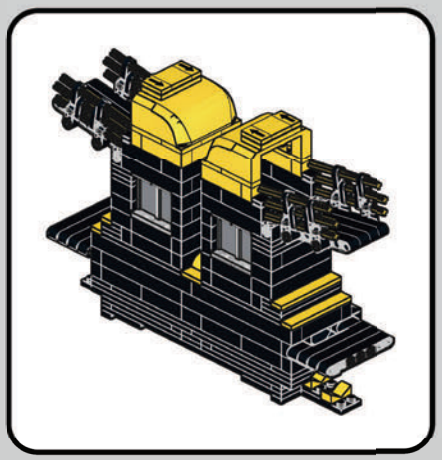

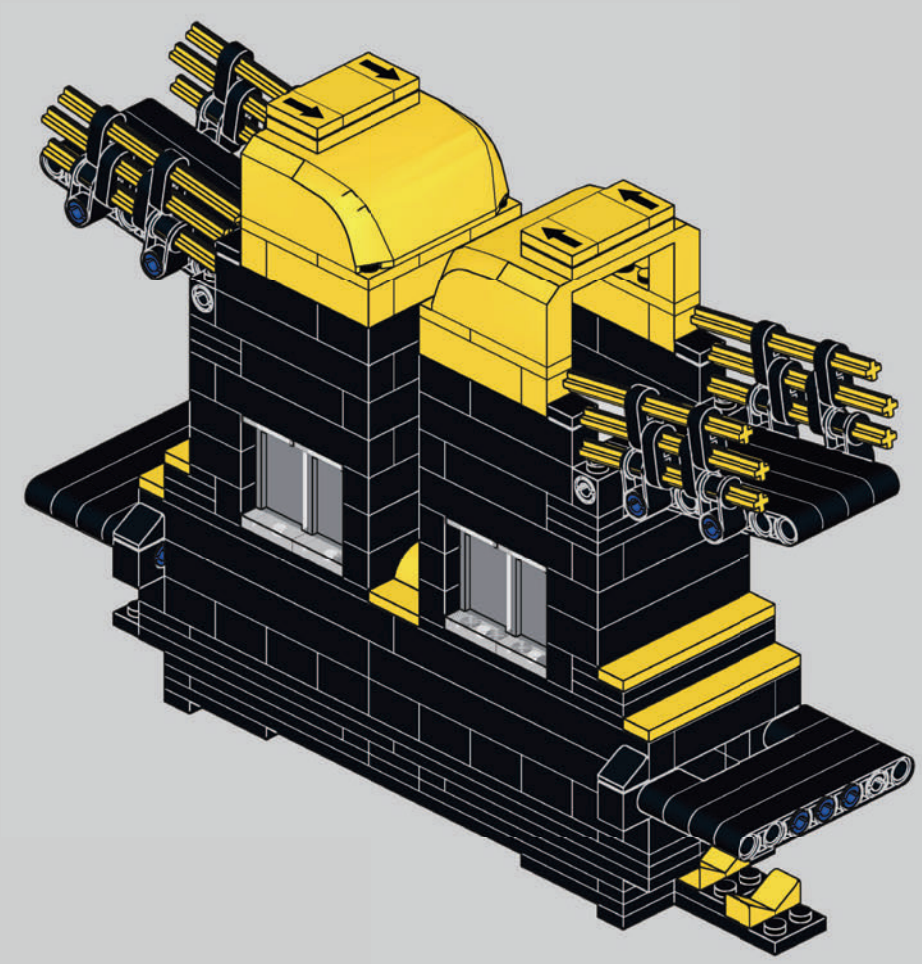

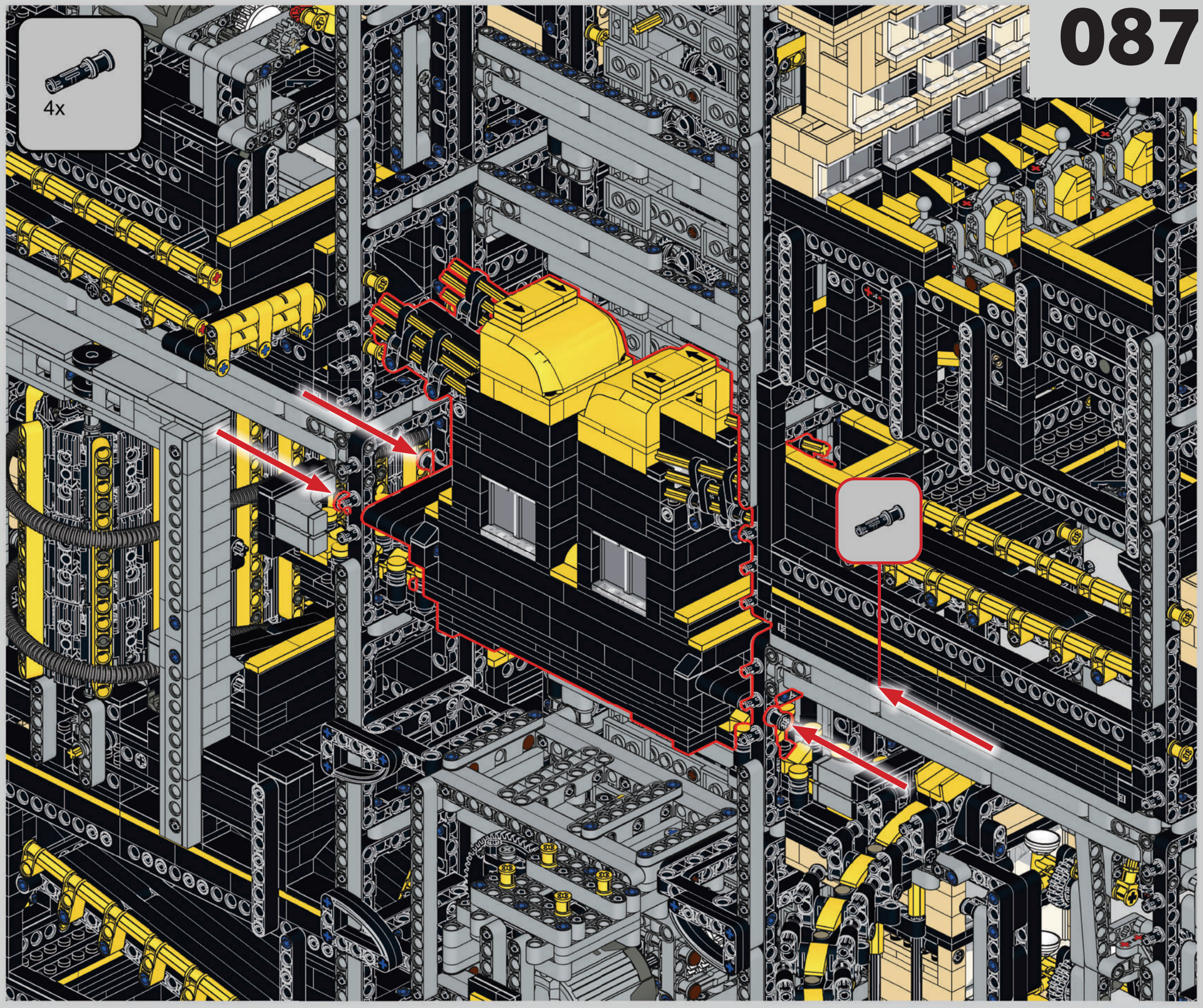
4x

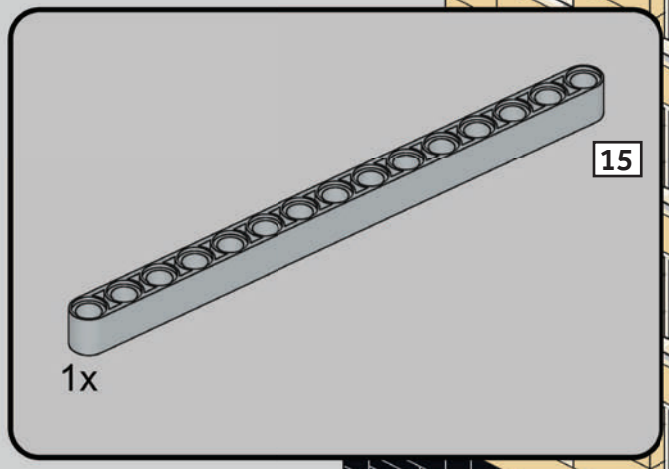
15
1x

LEVEL 1-3
Stuck Ball Lift

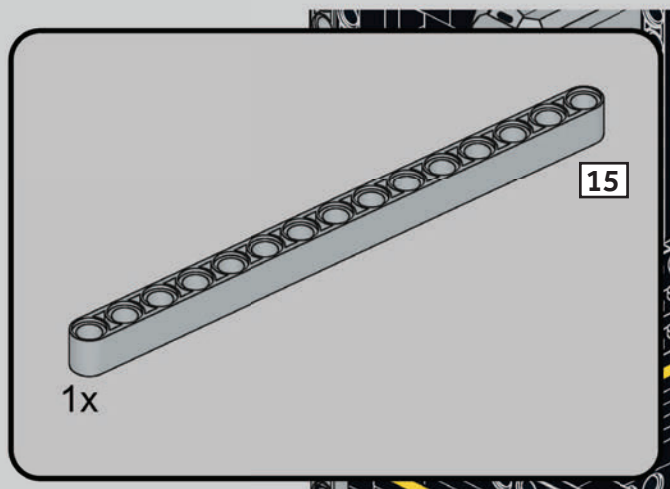
15
1x

LEVEL 1-3
Stuck Ball Lift

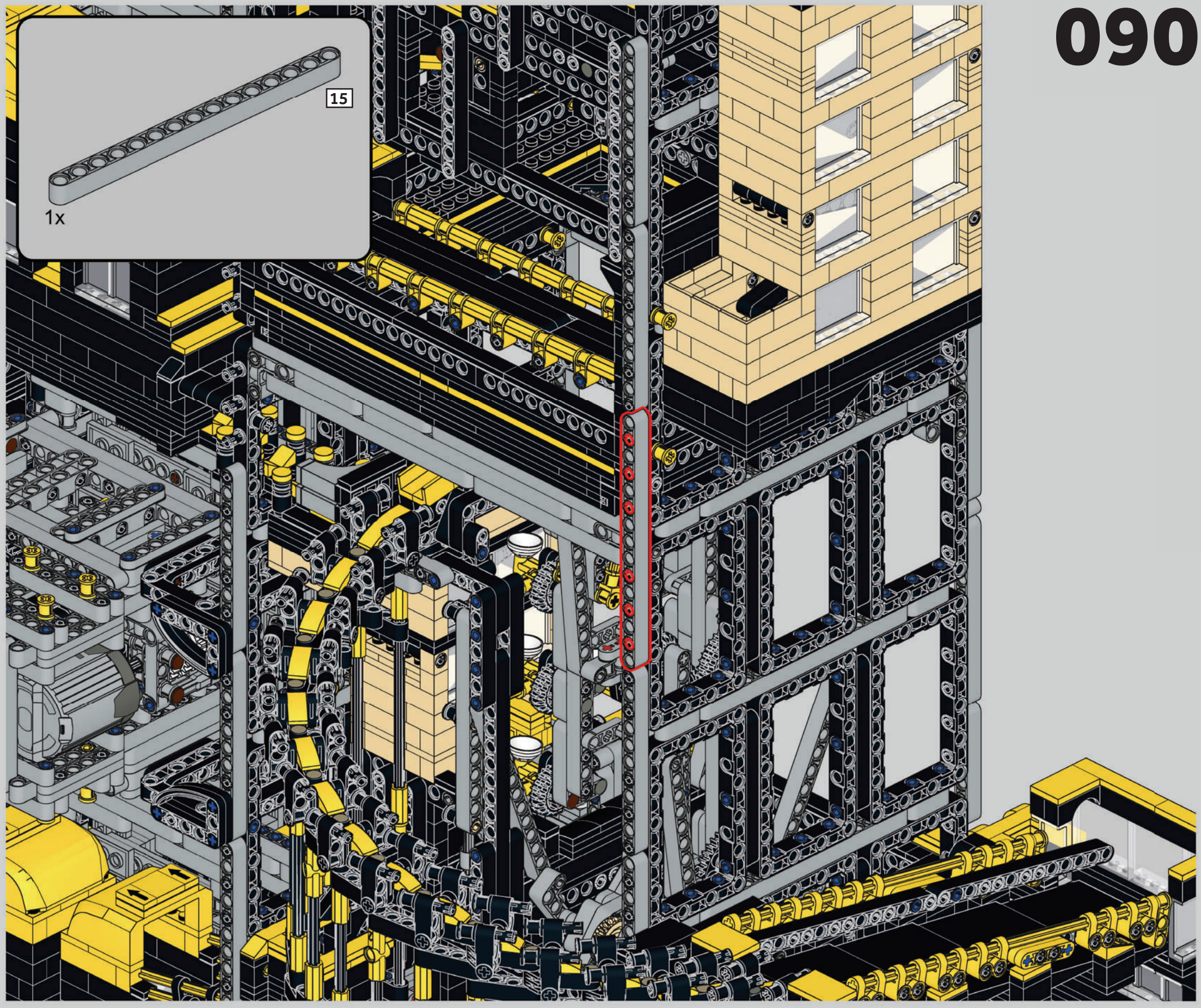
15
1x

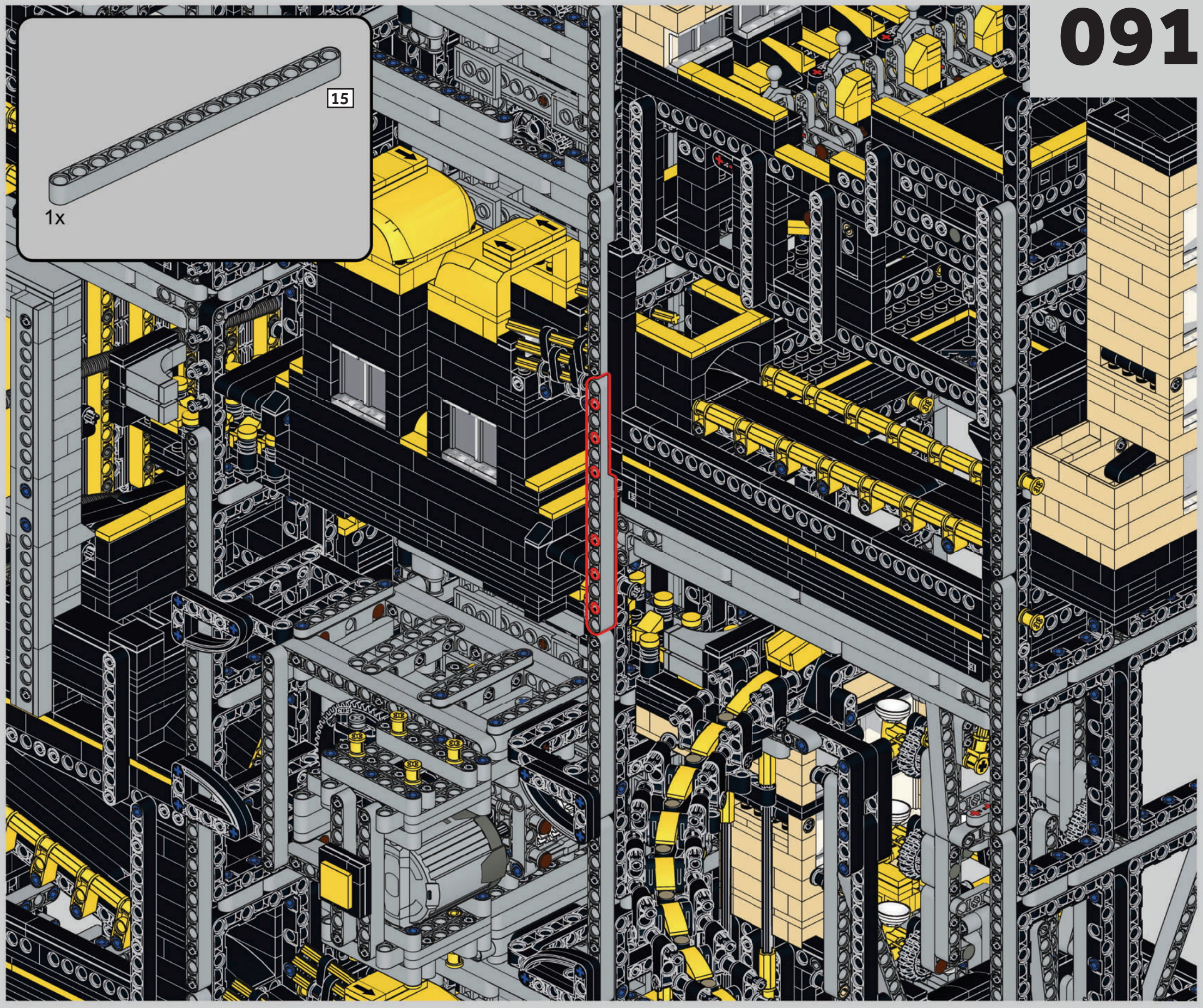
15
1x

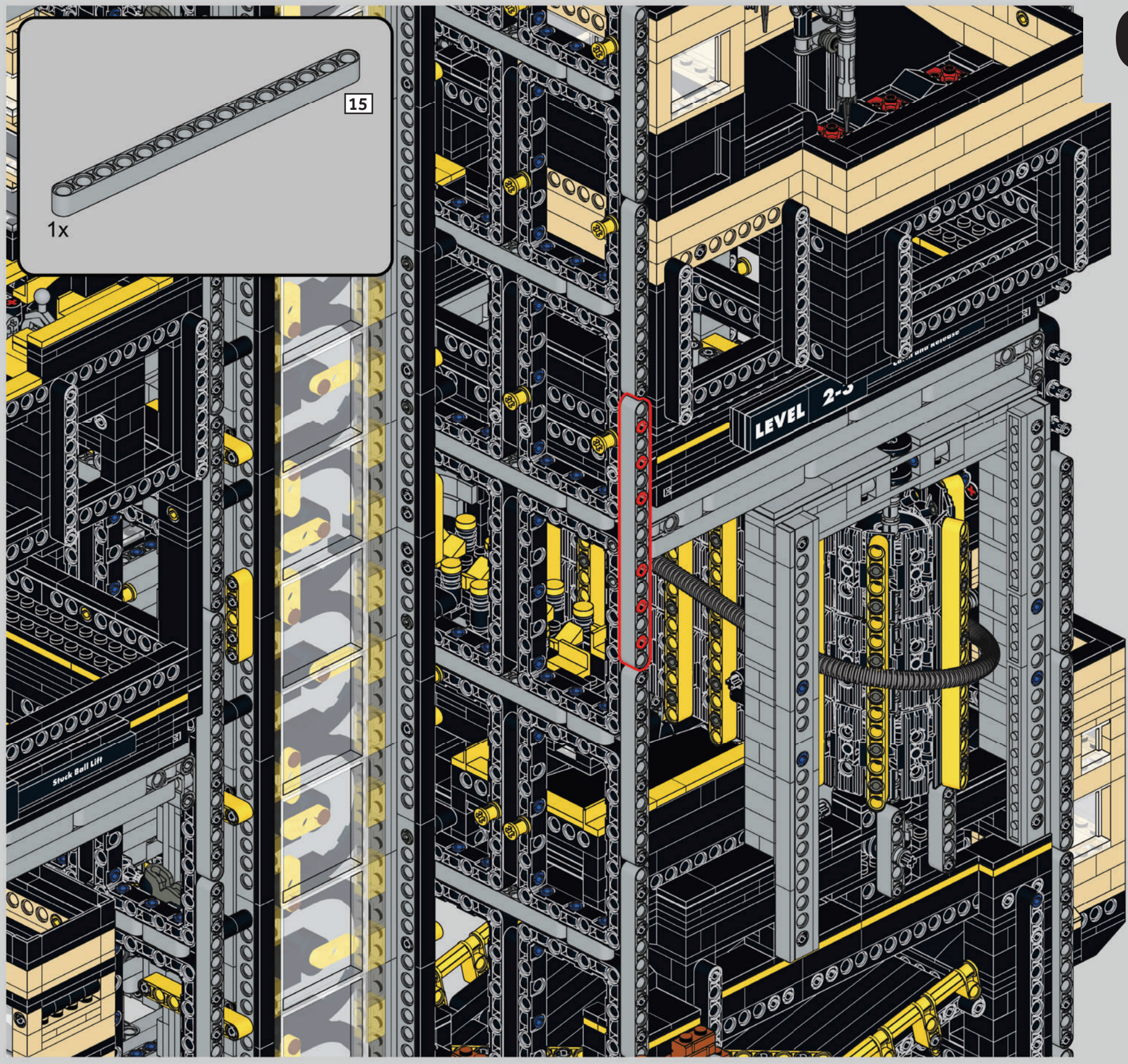
15
1x
LEVEL 2-3
Stuck Ball Lift

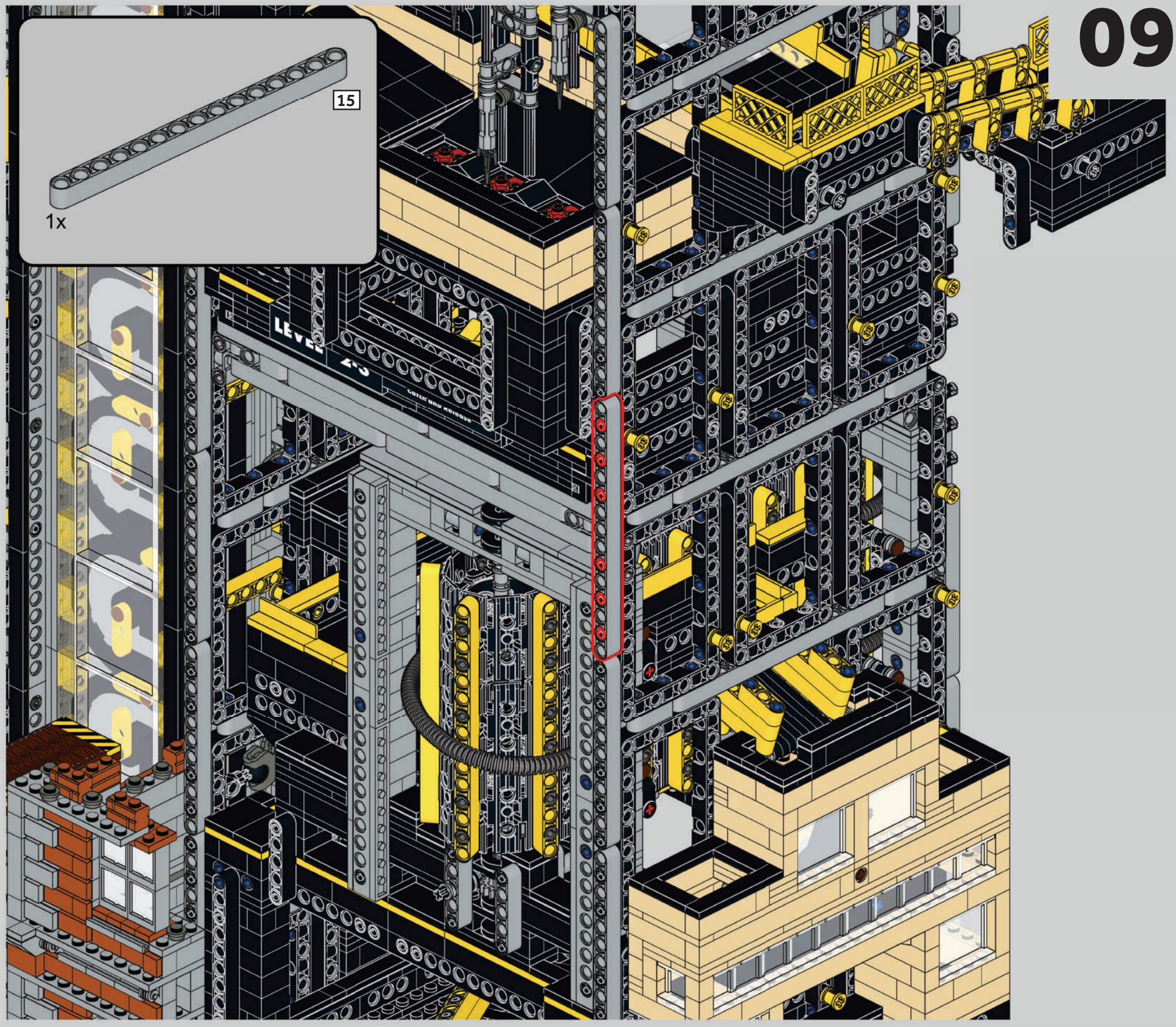
15
1x

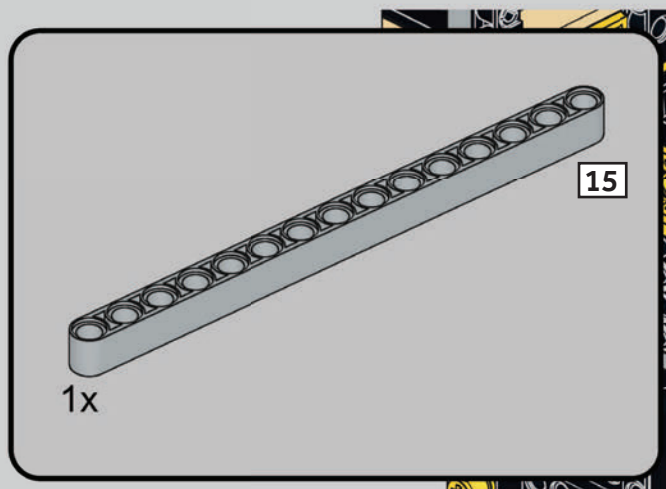
15
1x

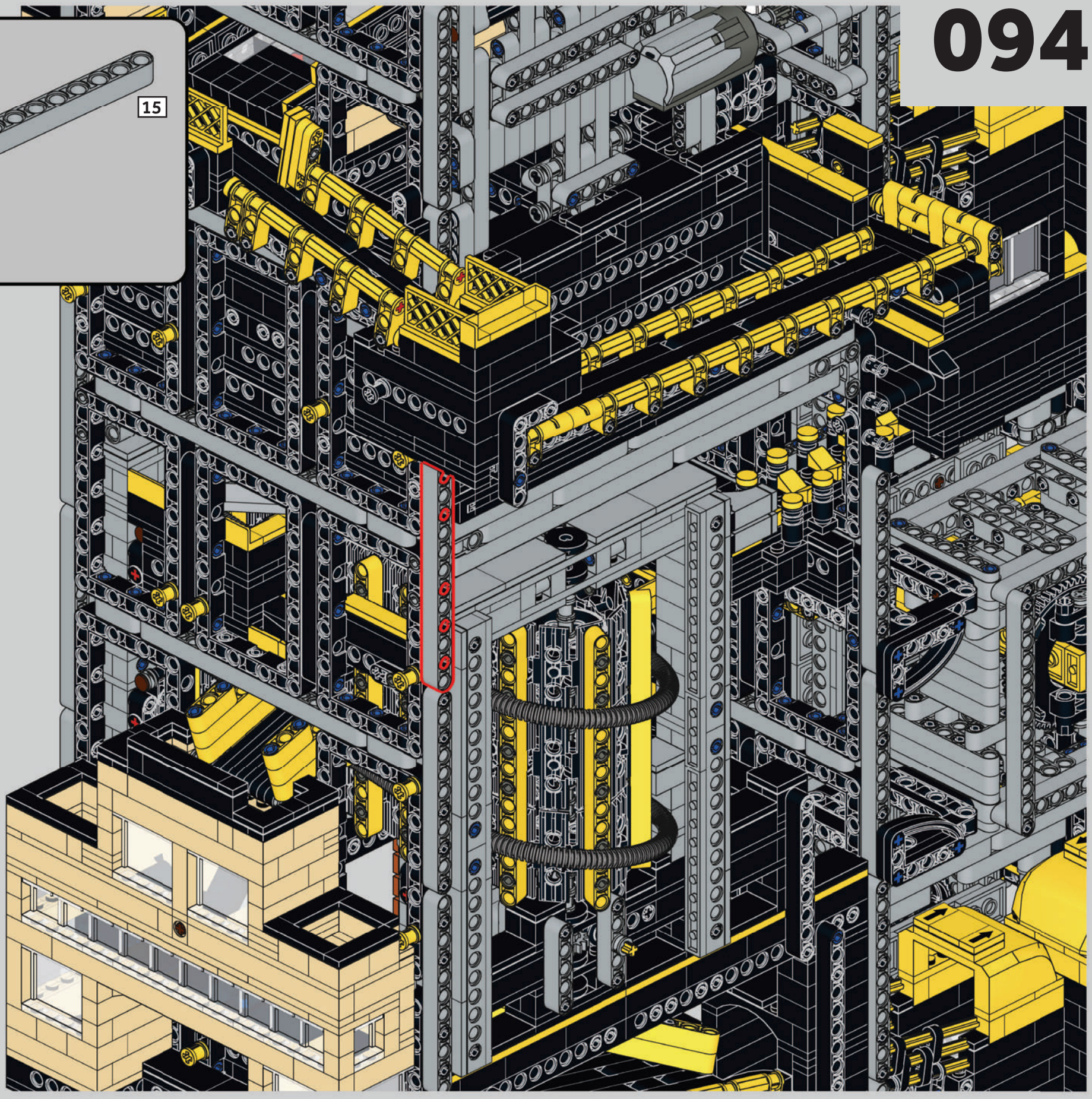

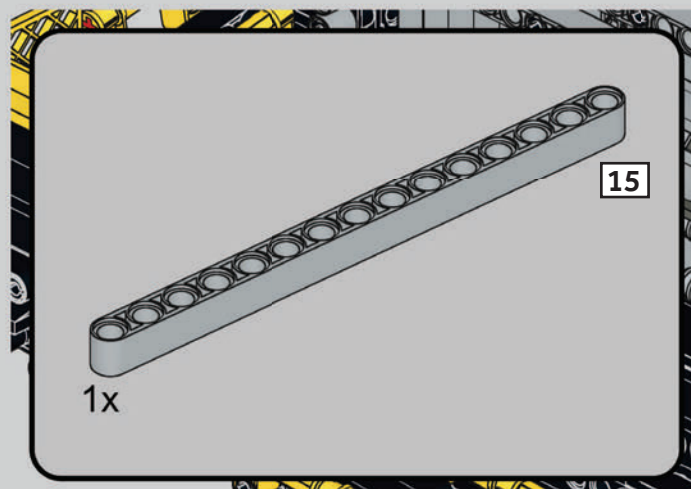
15
1x

096

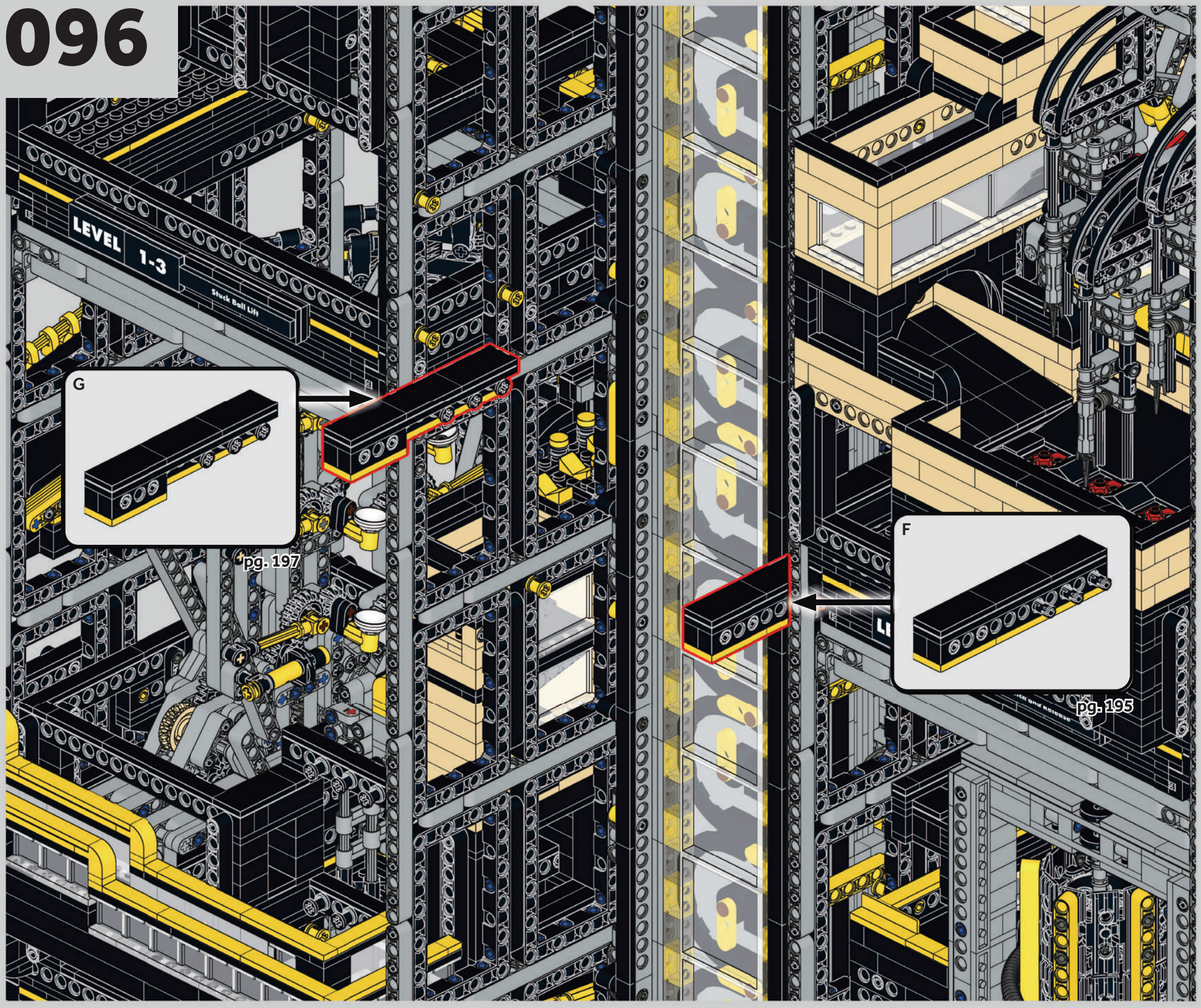

097

D
04

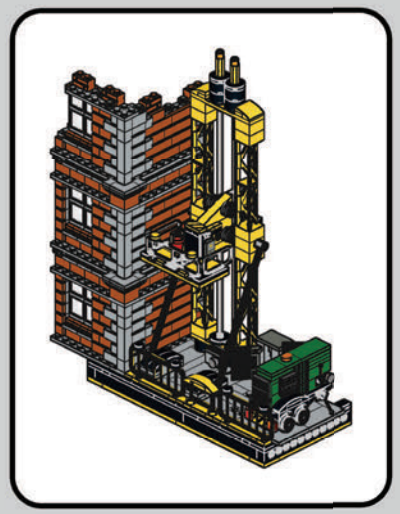

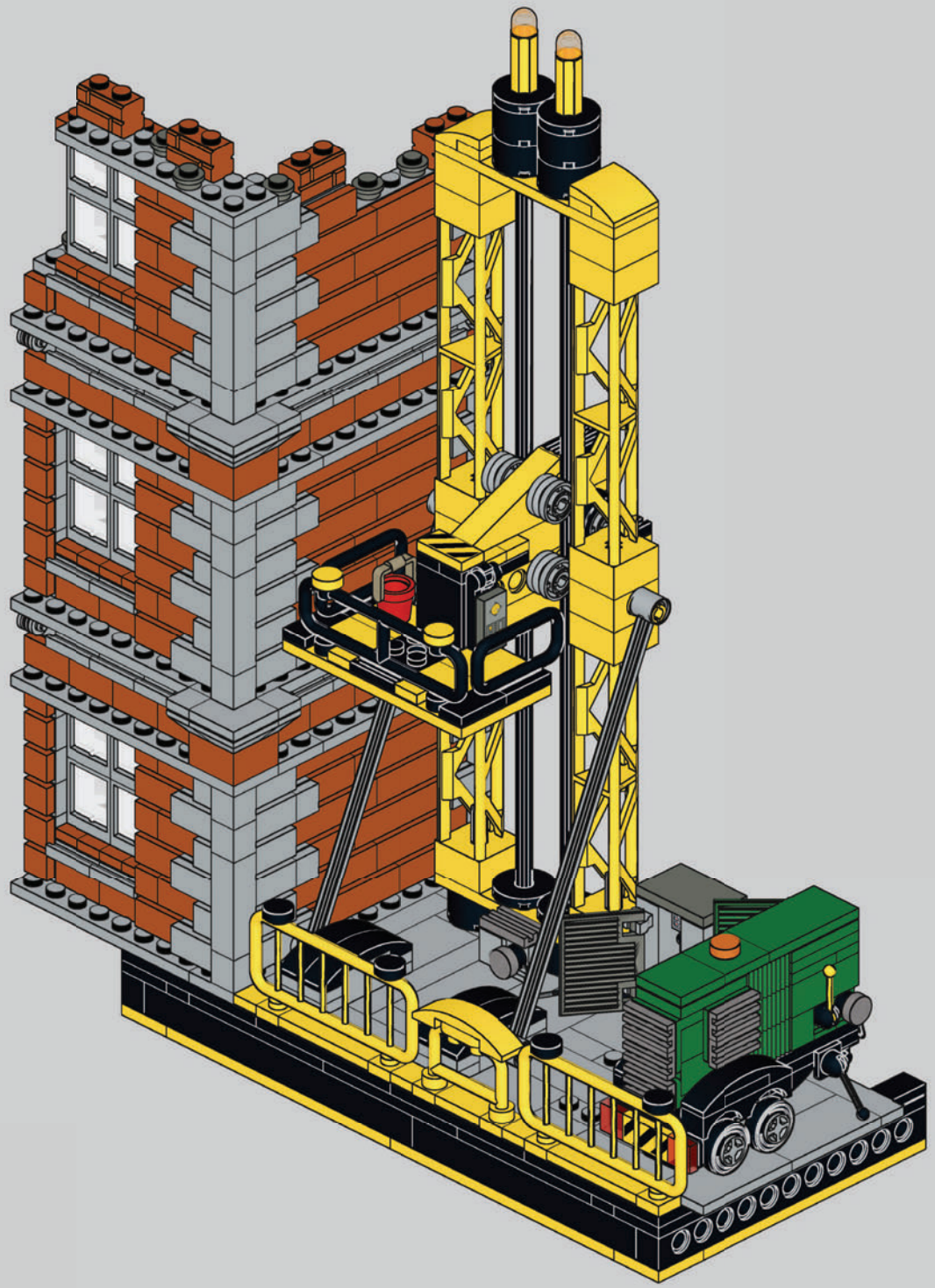

098

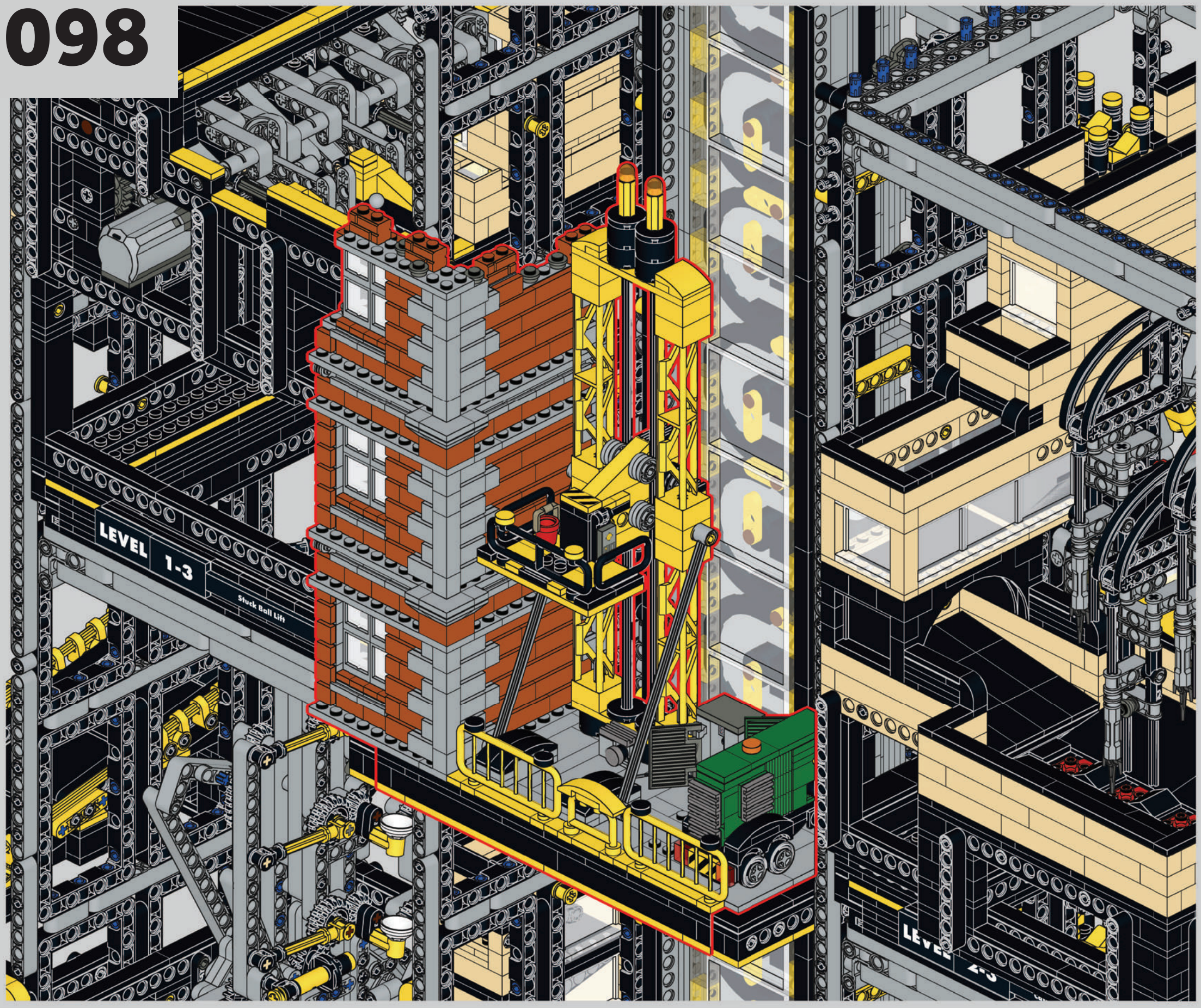

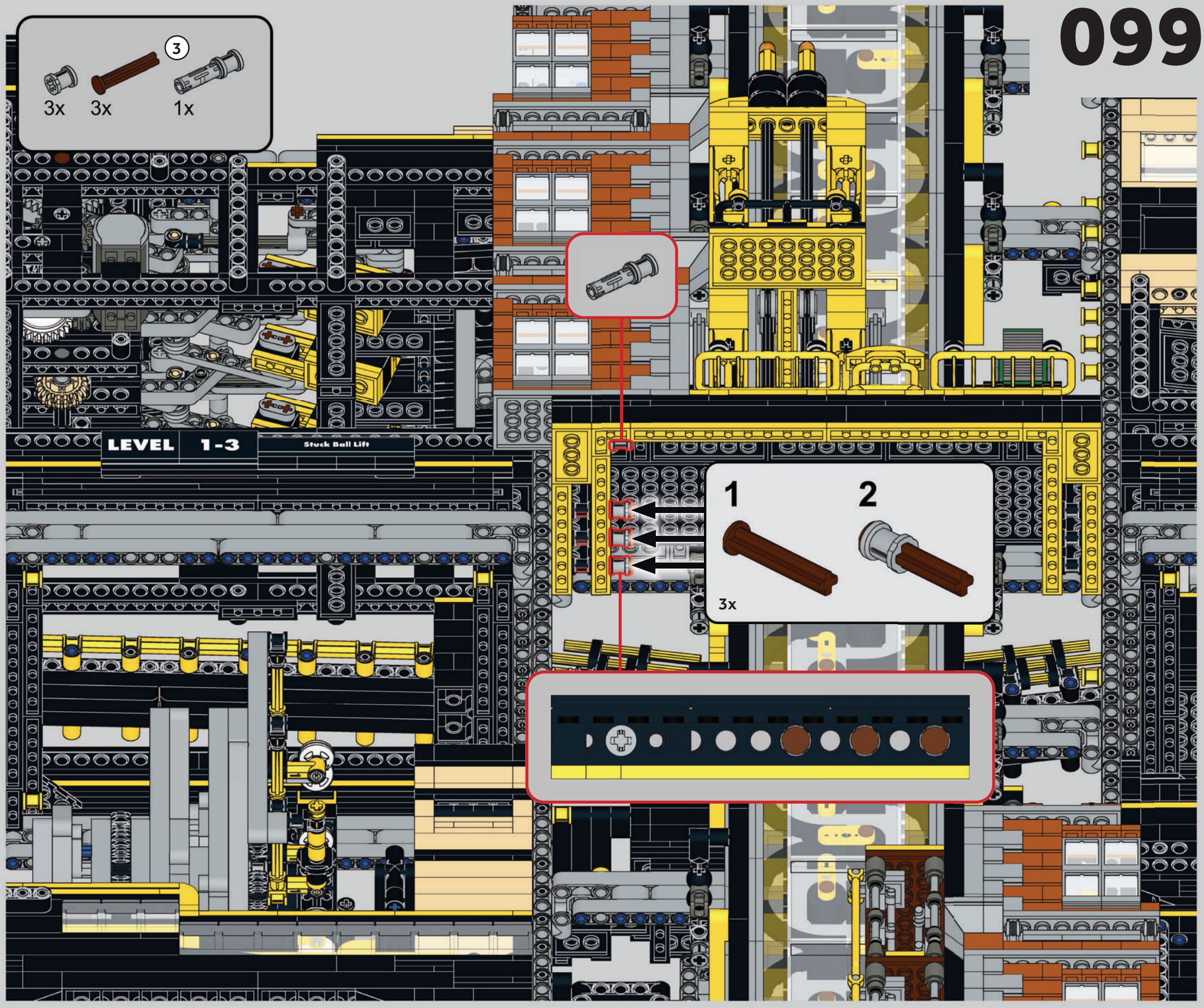
3
3x
3x
1x
LEVEL 1-3
Stuck Ball Lift
1
2
3x

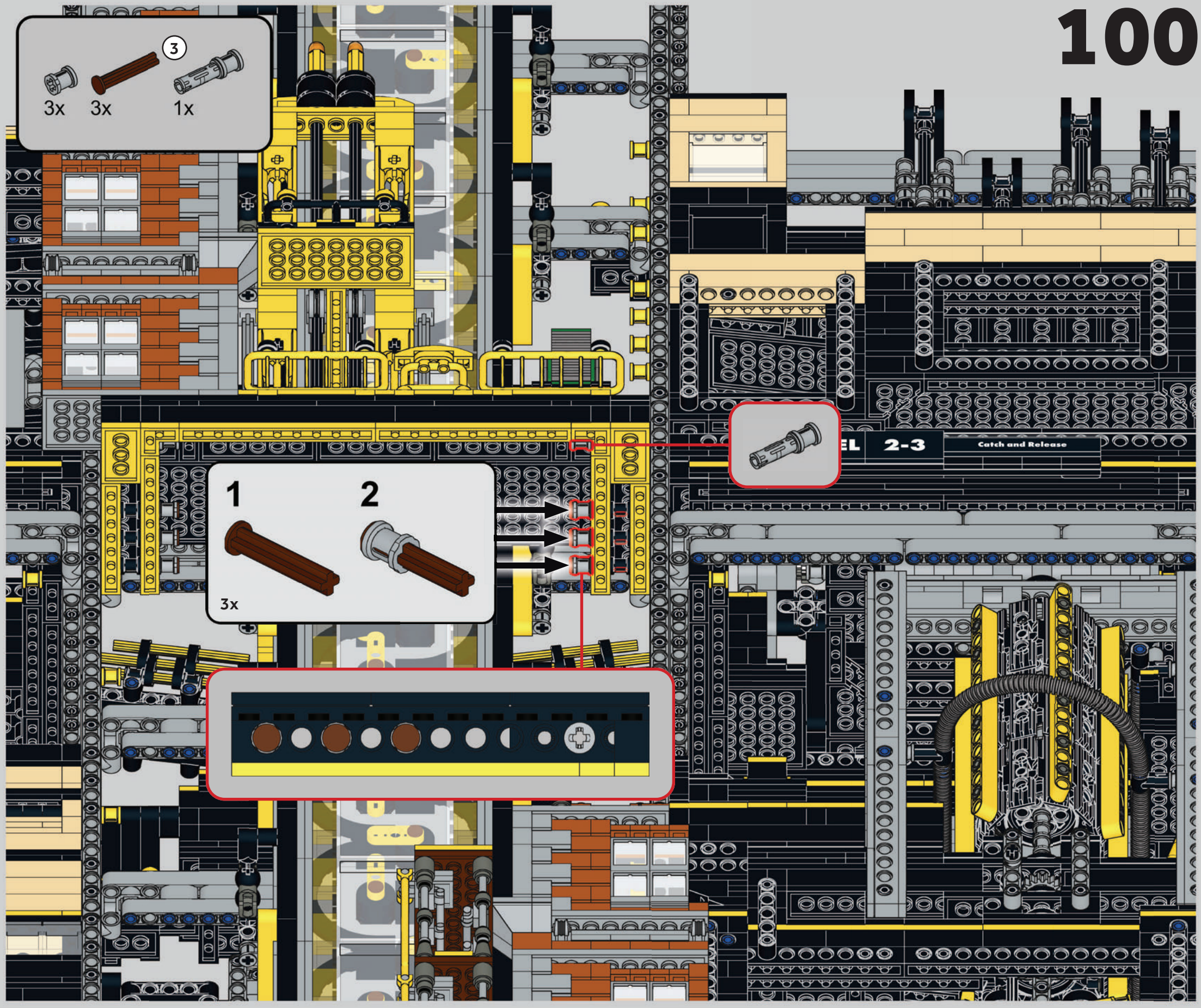
3
3x
3x
1x
1
2
3x
2-3
Catch and Release

101

H

2x

pg. 199

102

H

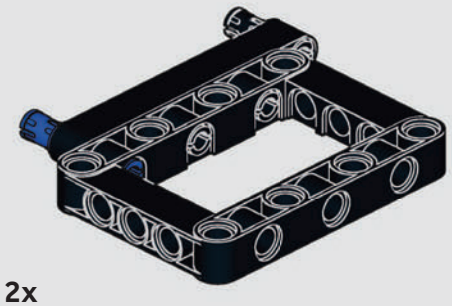

2x

pg. 199

103

S
02

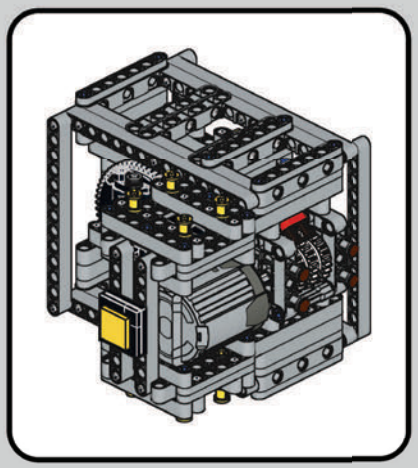

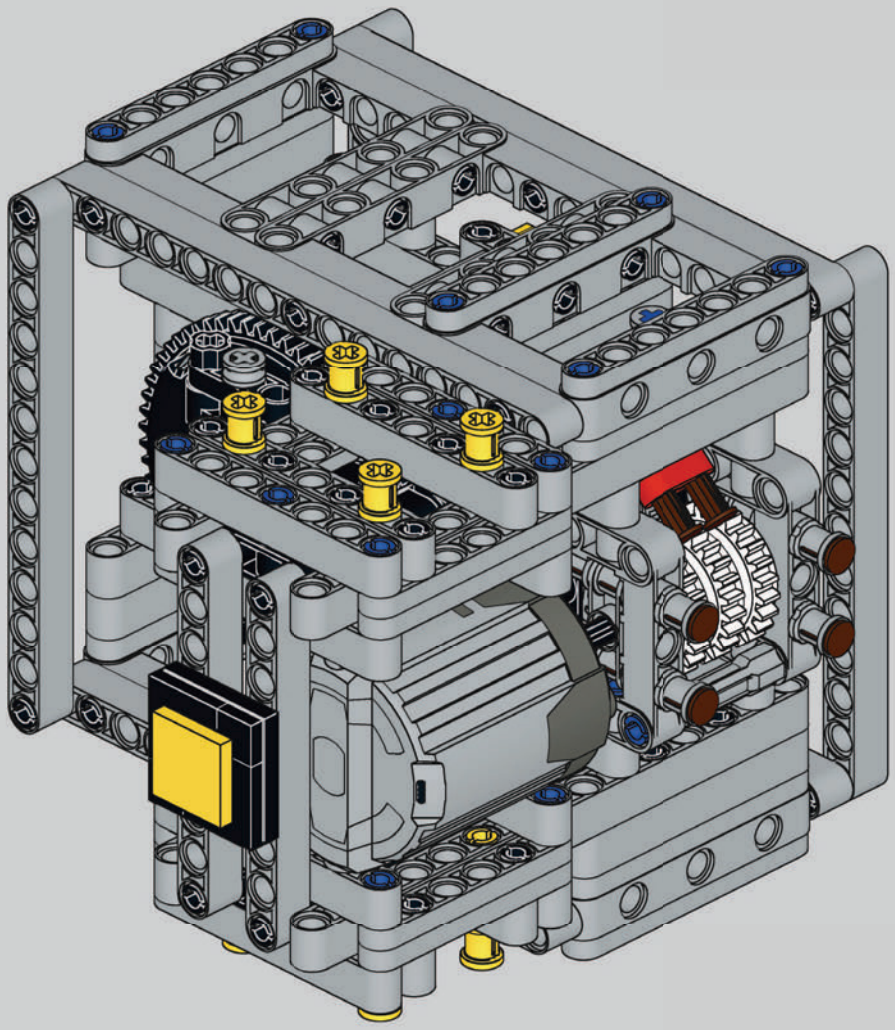

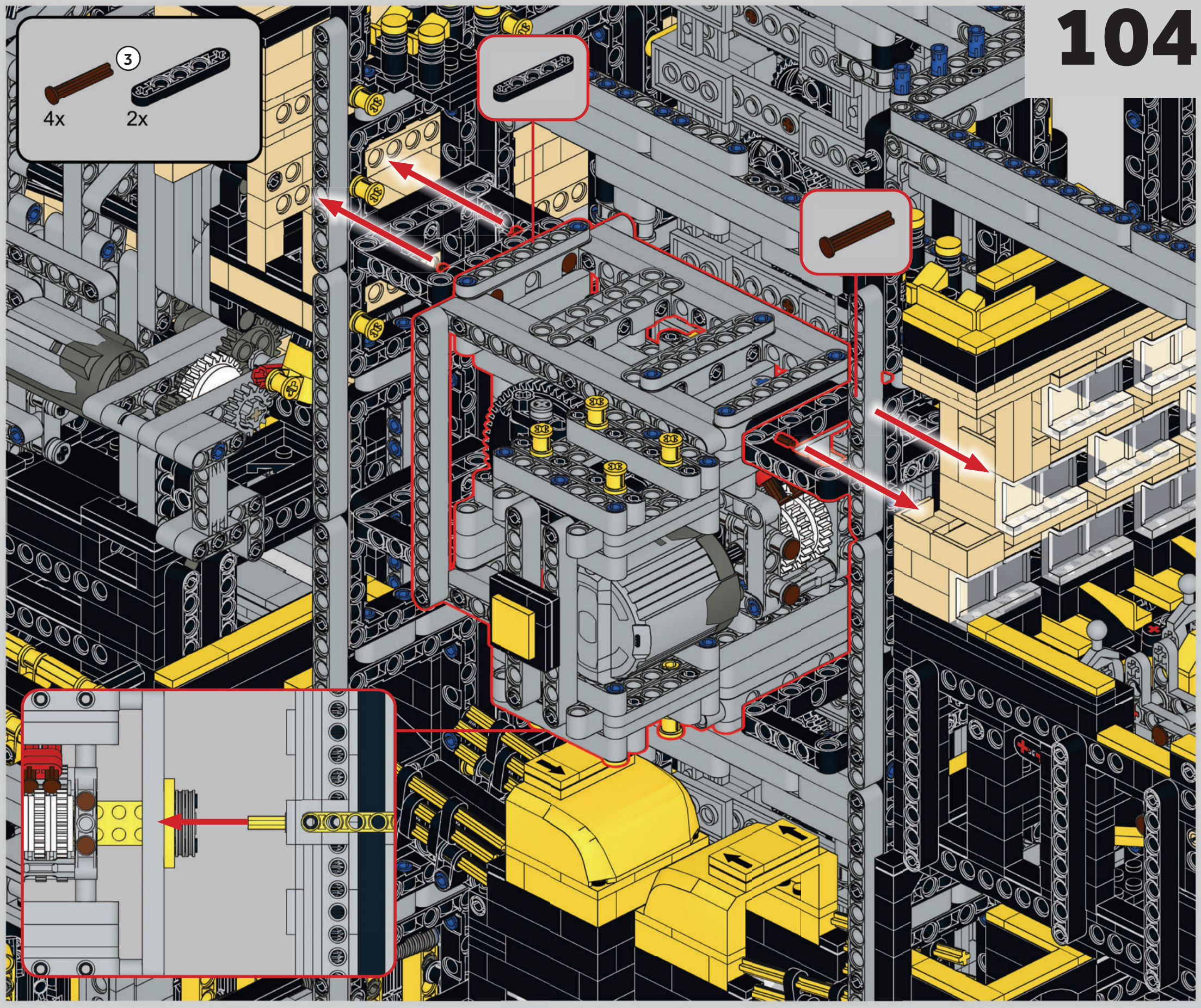
3
4x
2x

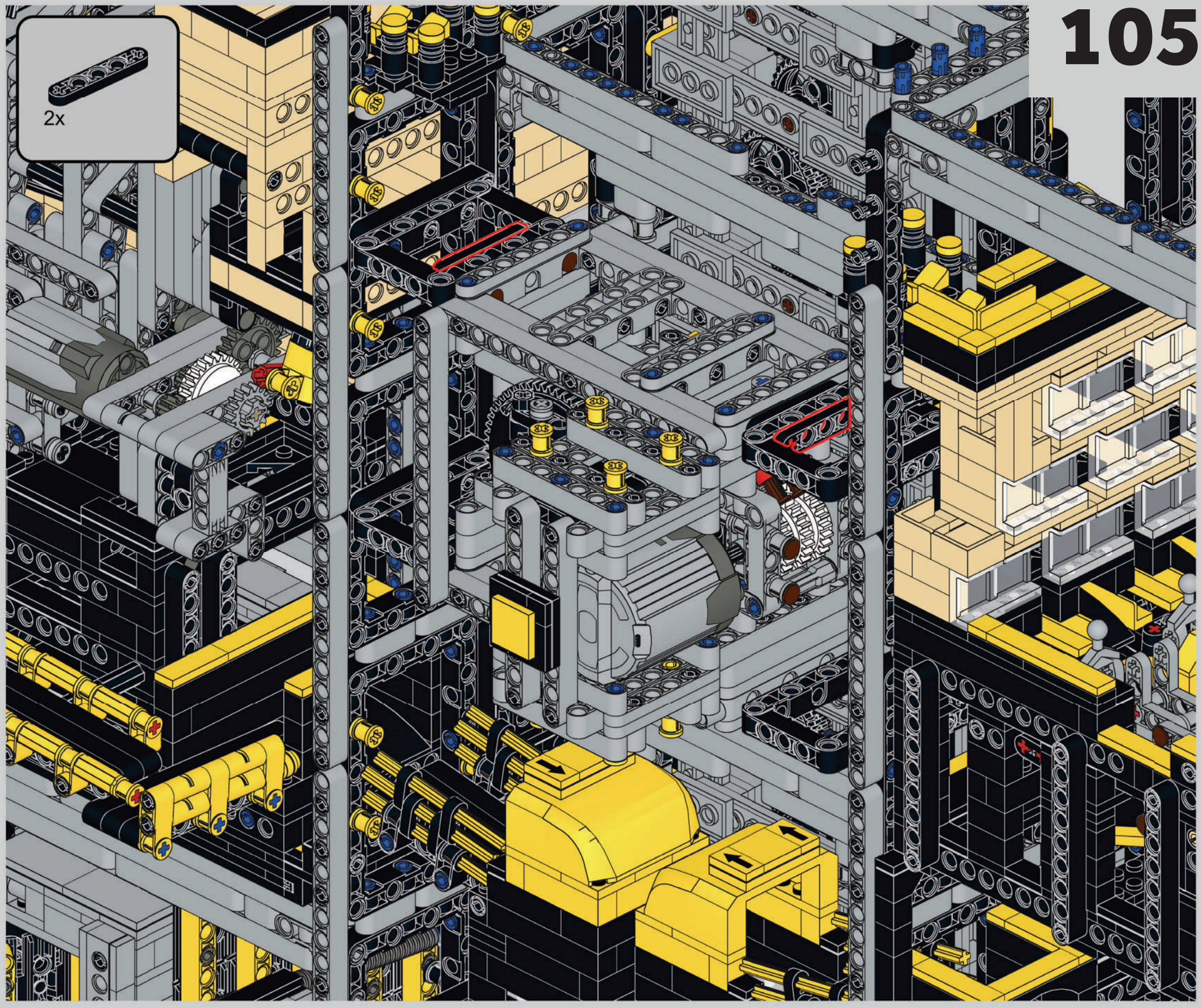
2x

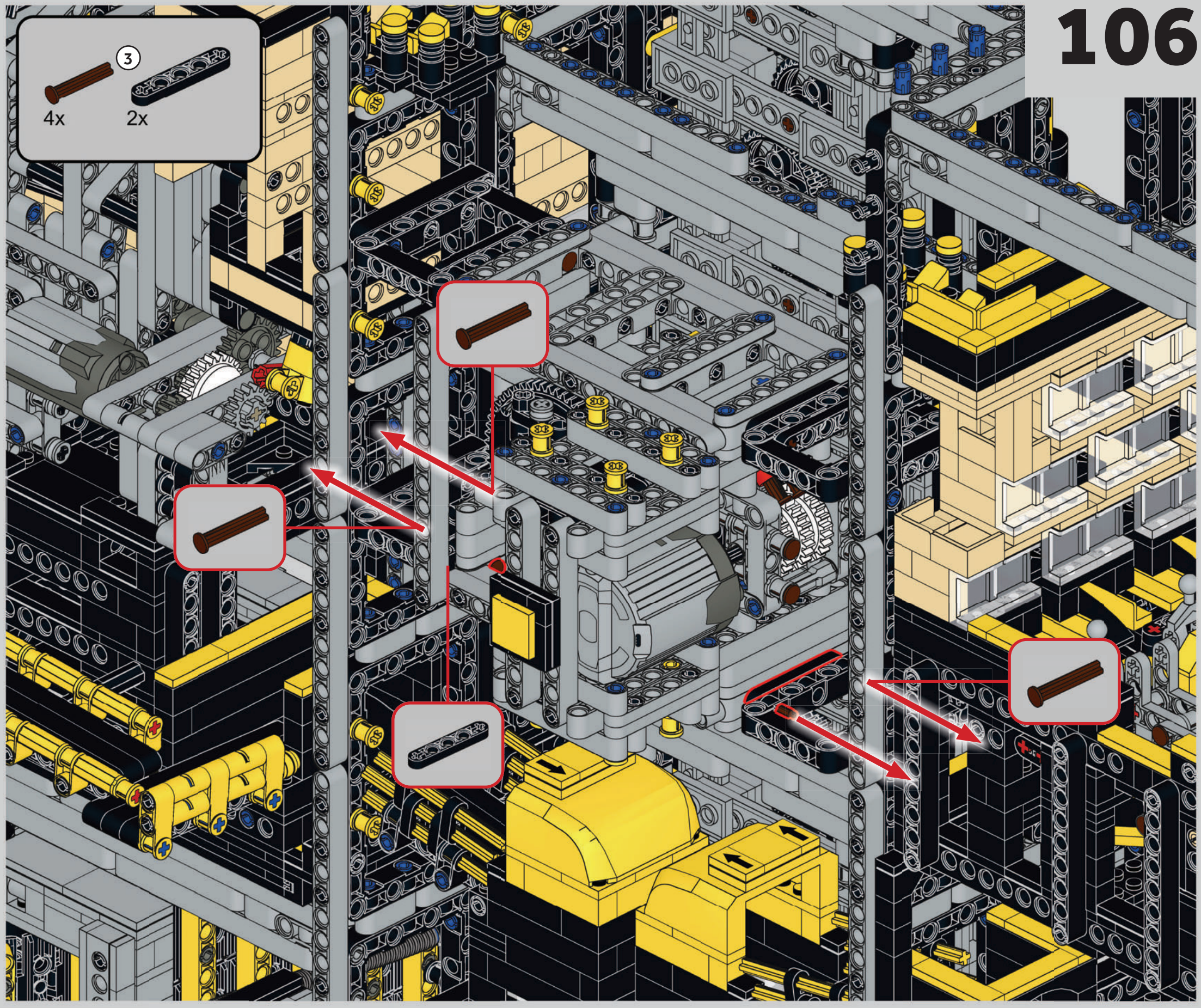
3
4x
2x

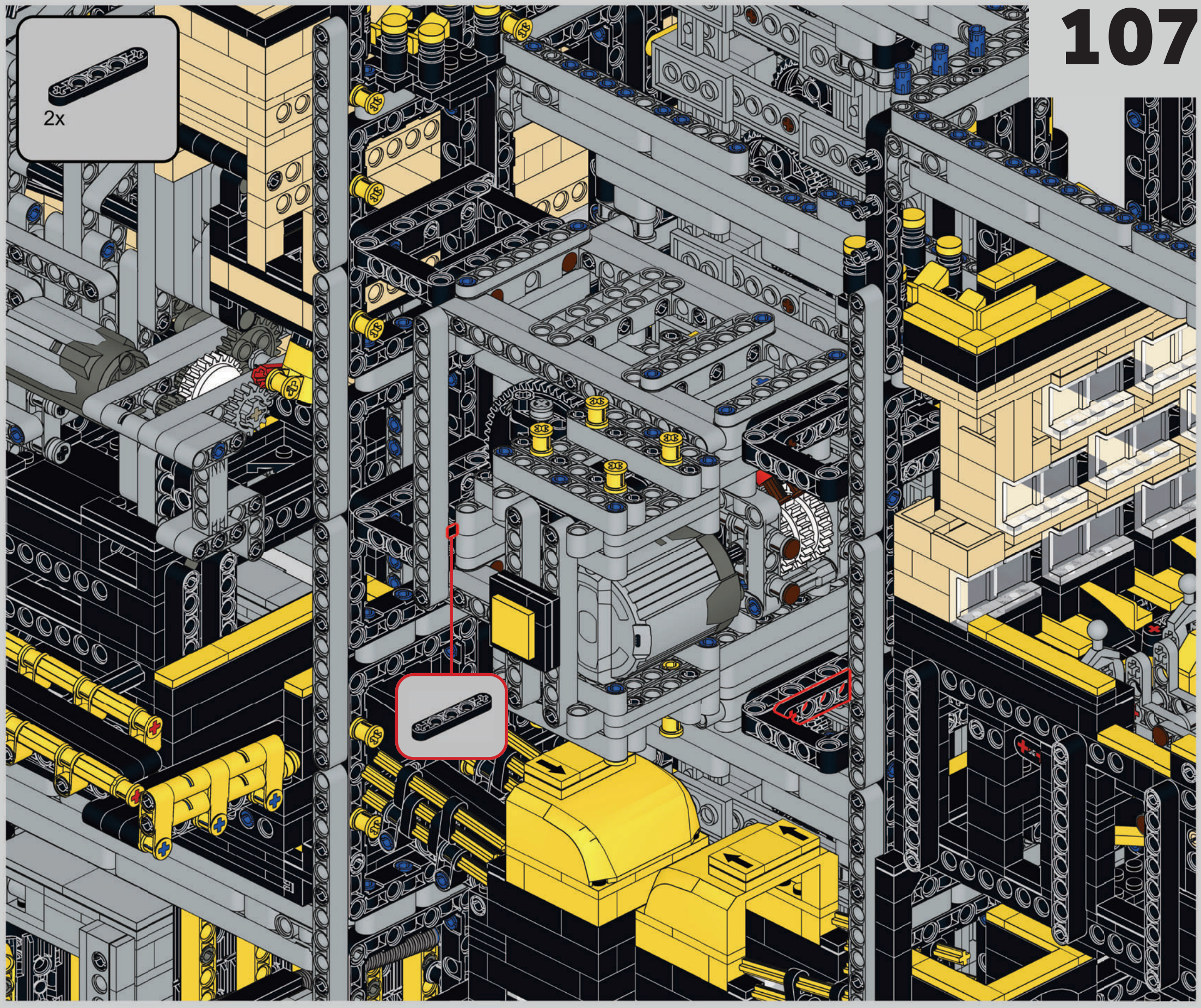
2x

108

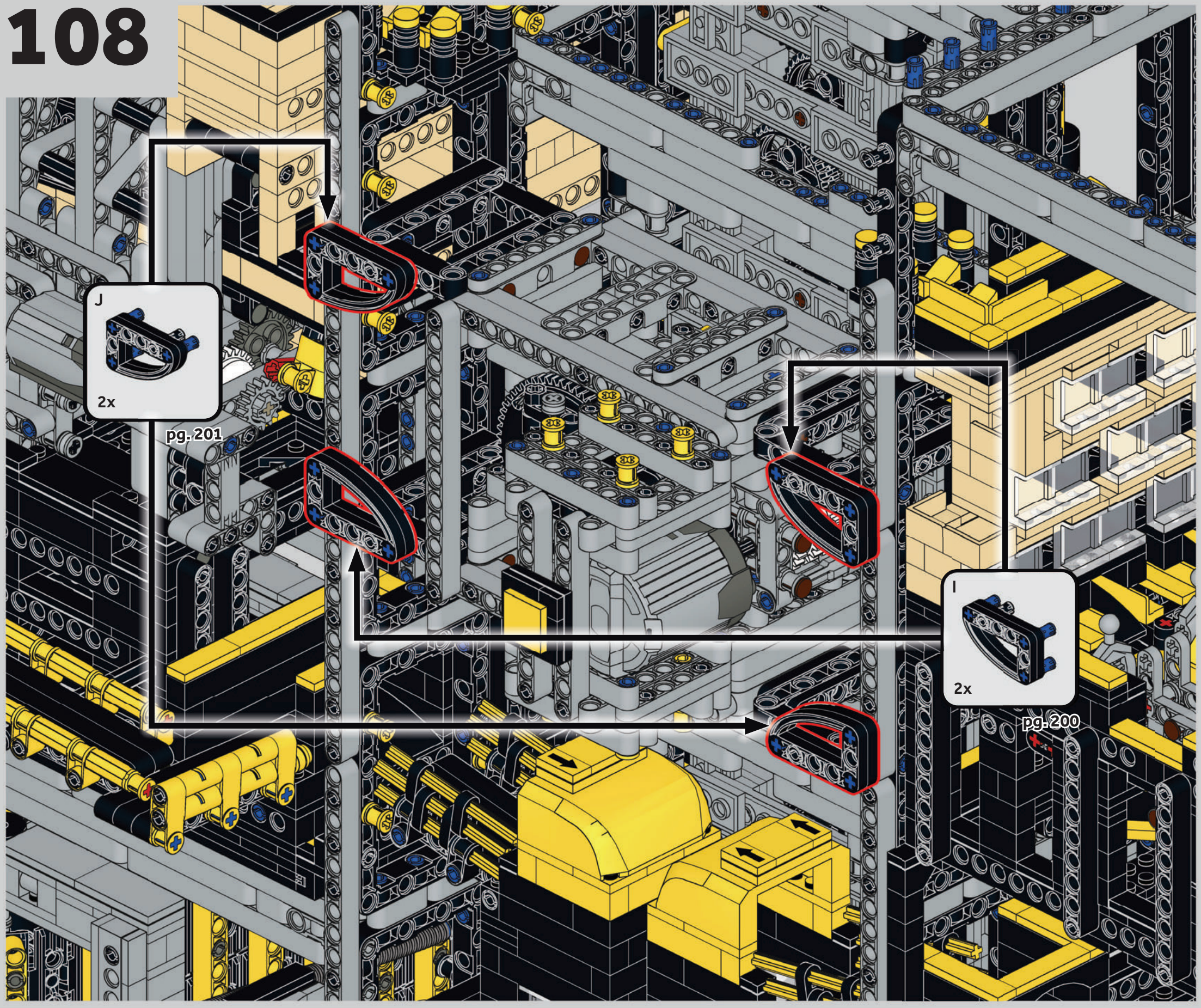

109

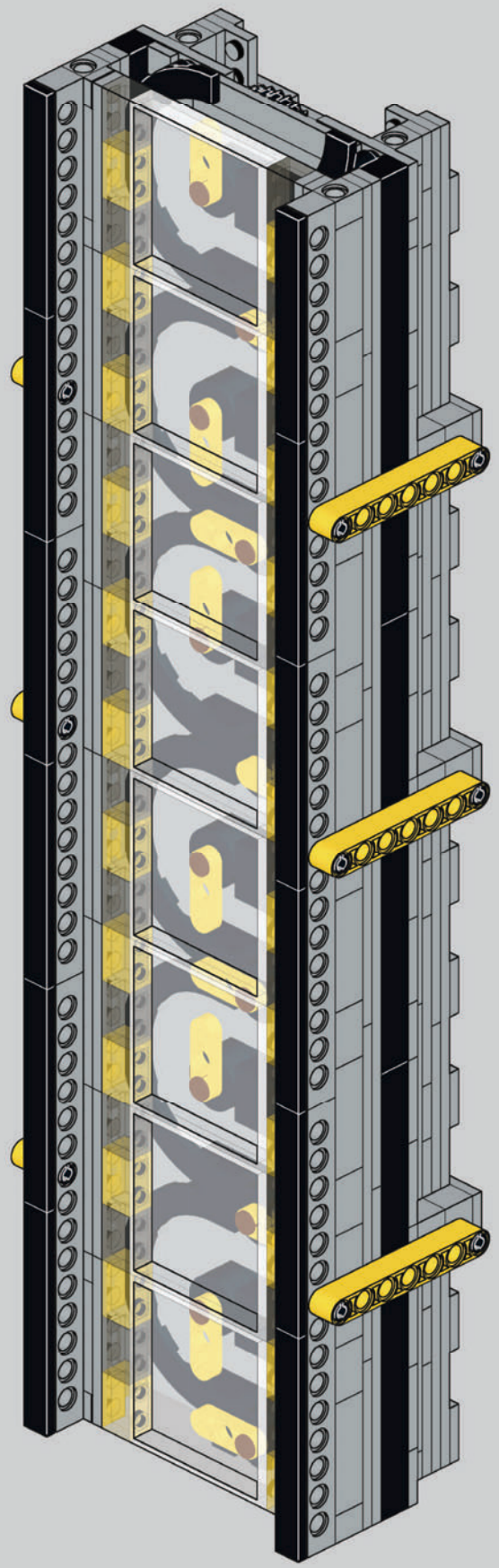

S
01

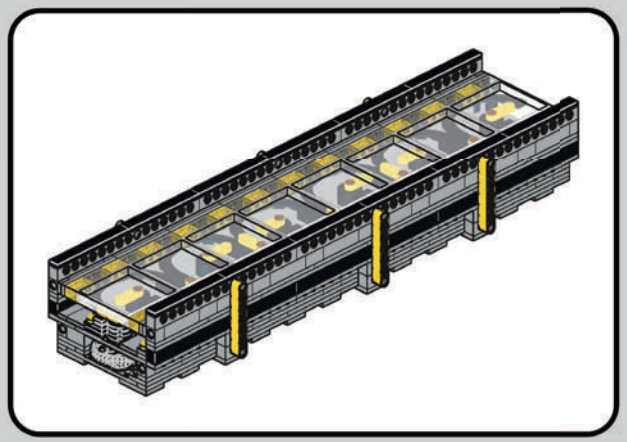

110

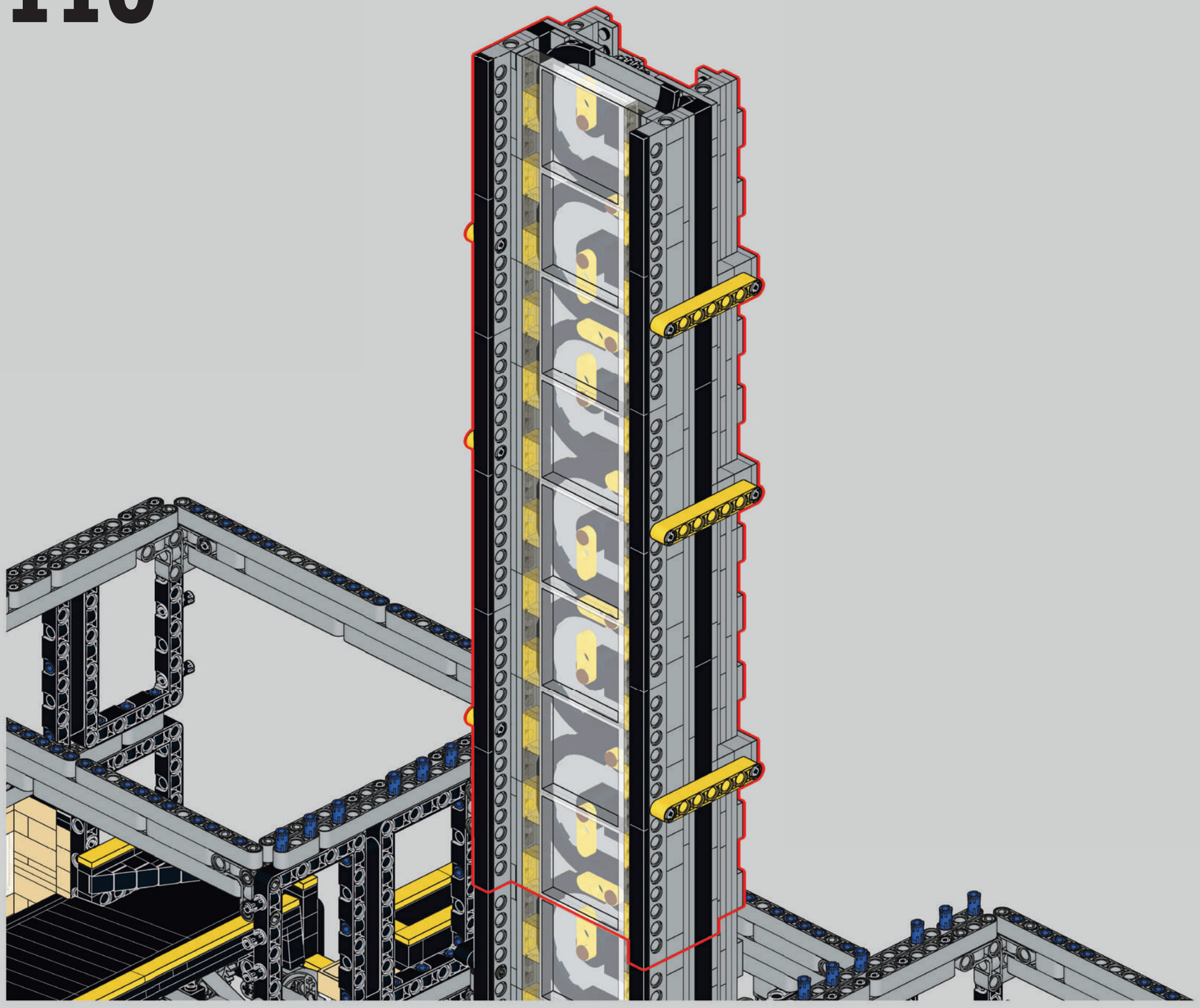

111

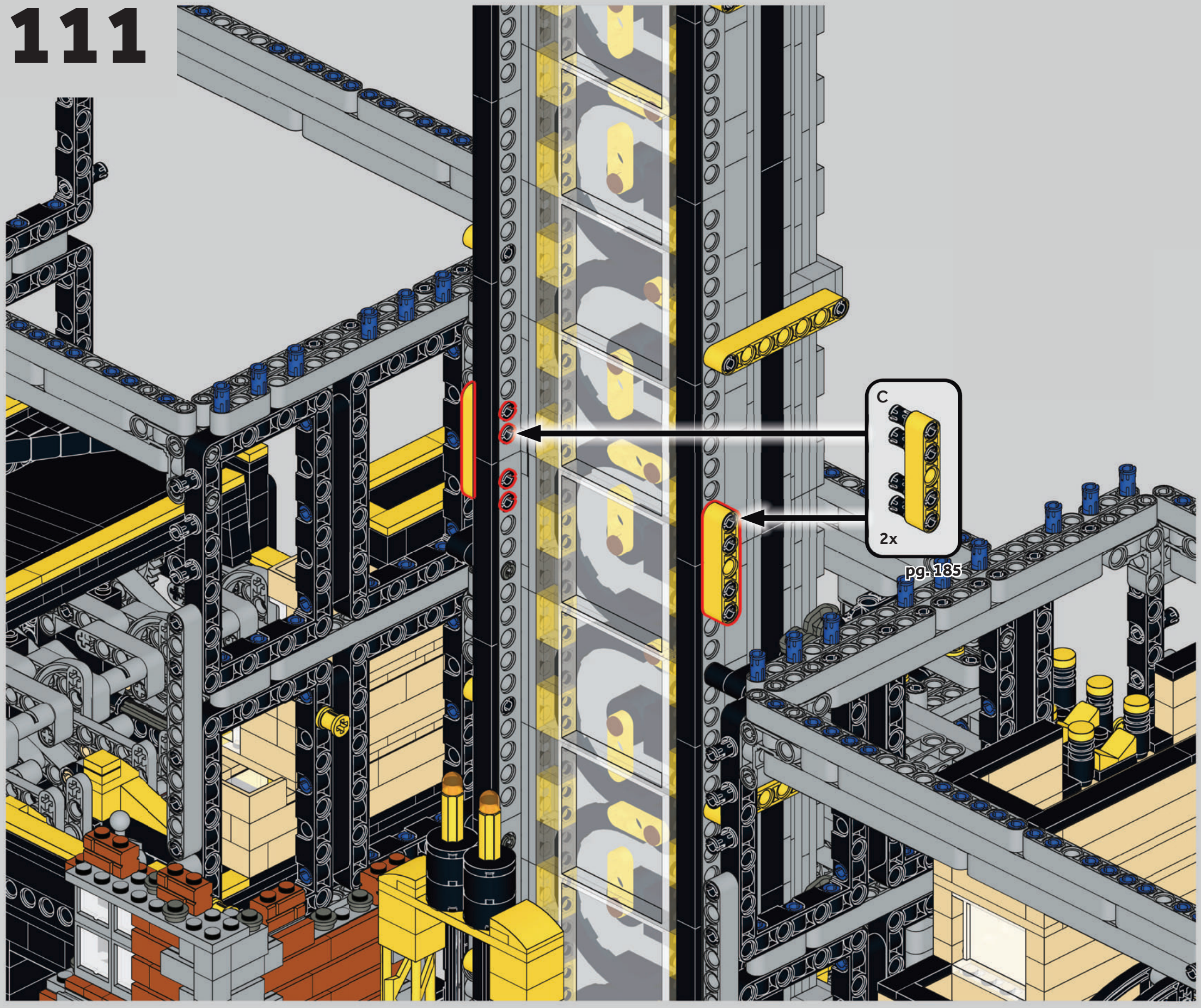

112

A
02

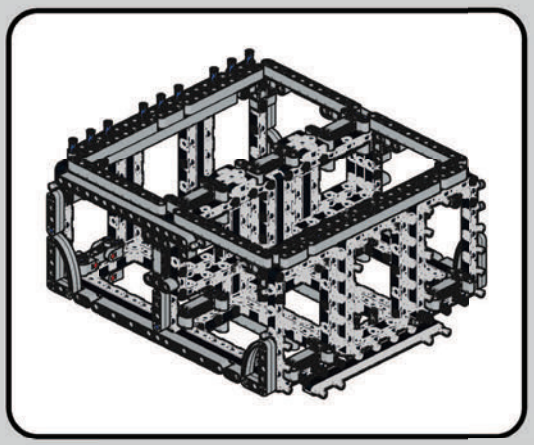

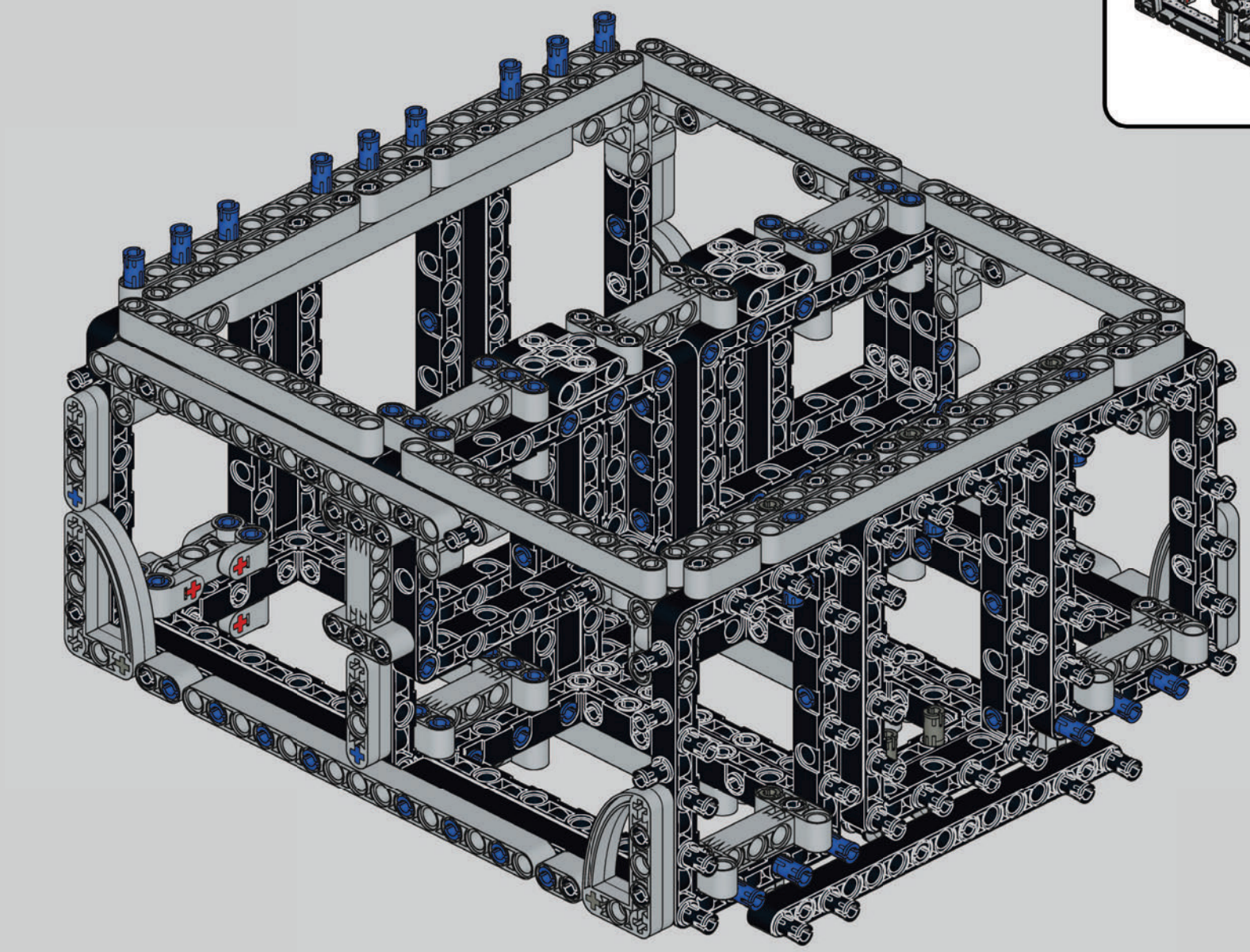

113

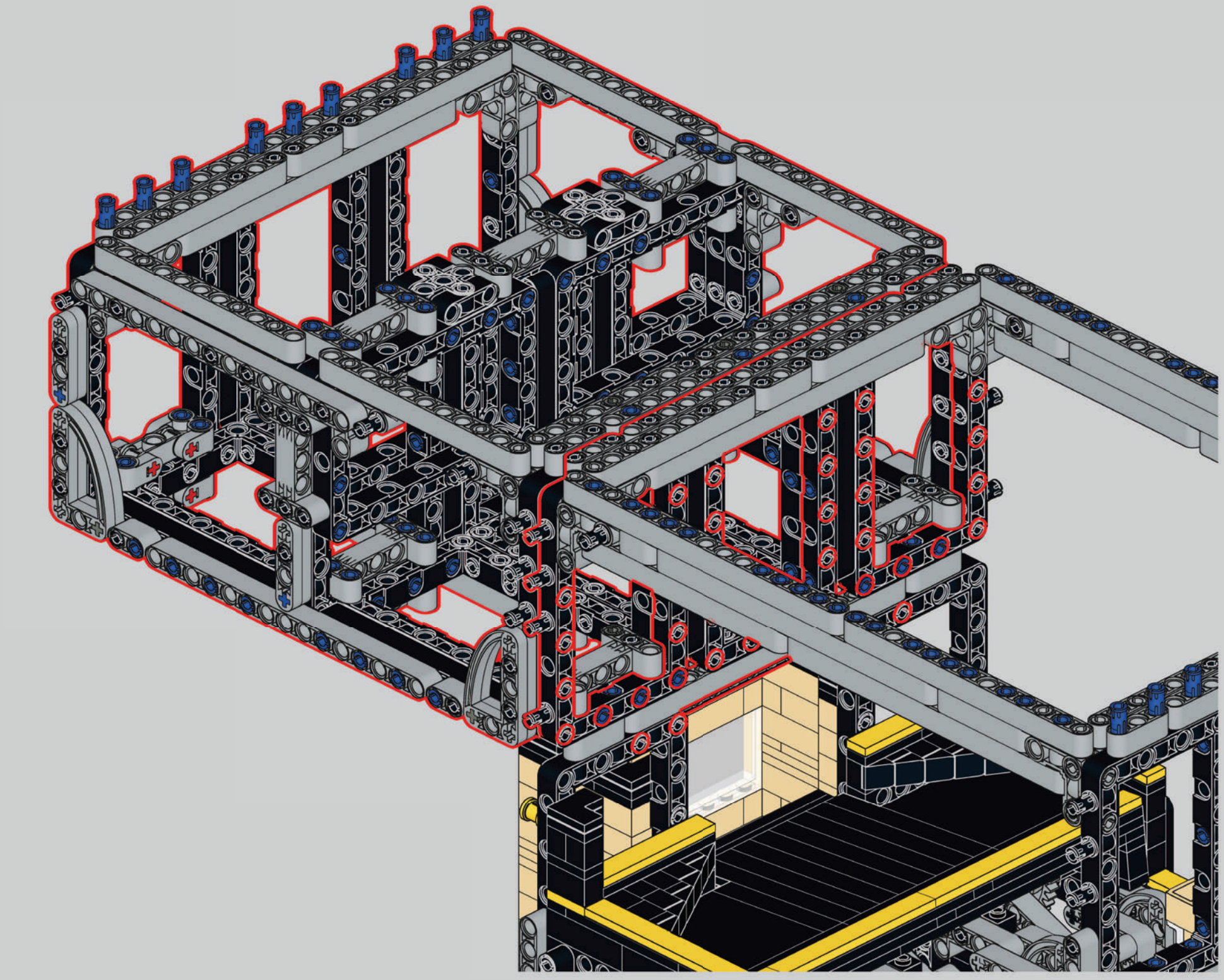

114

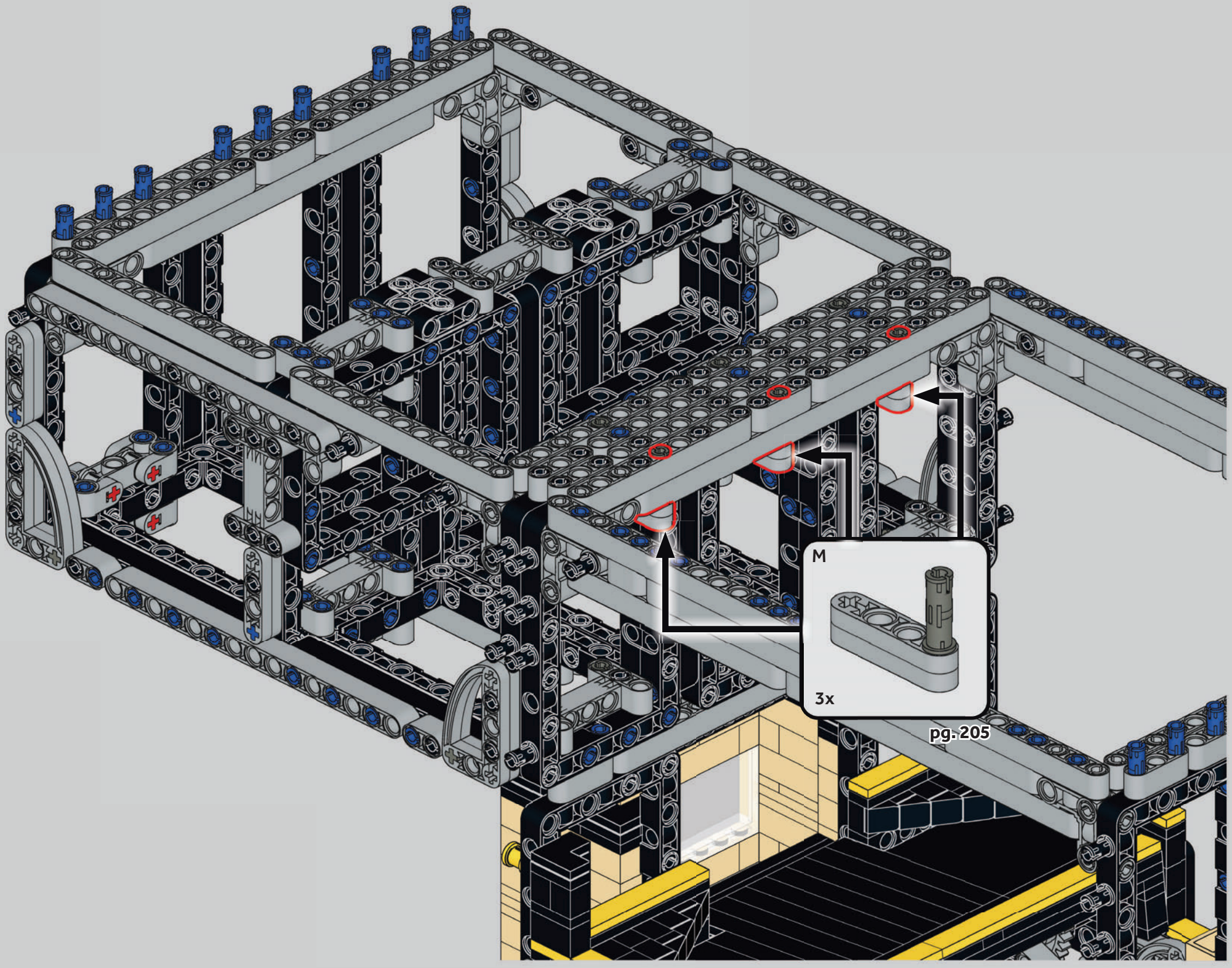

115

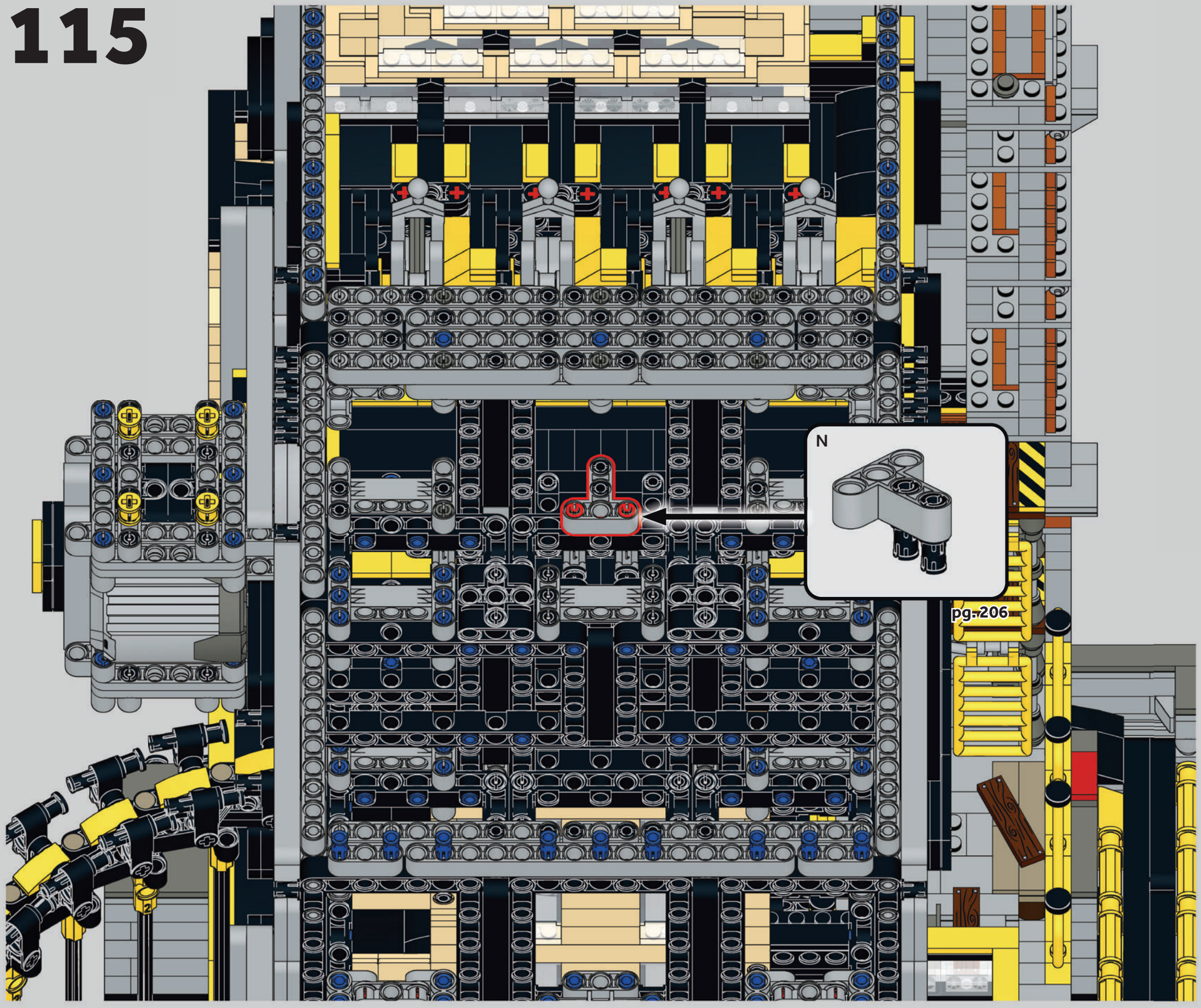

116

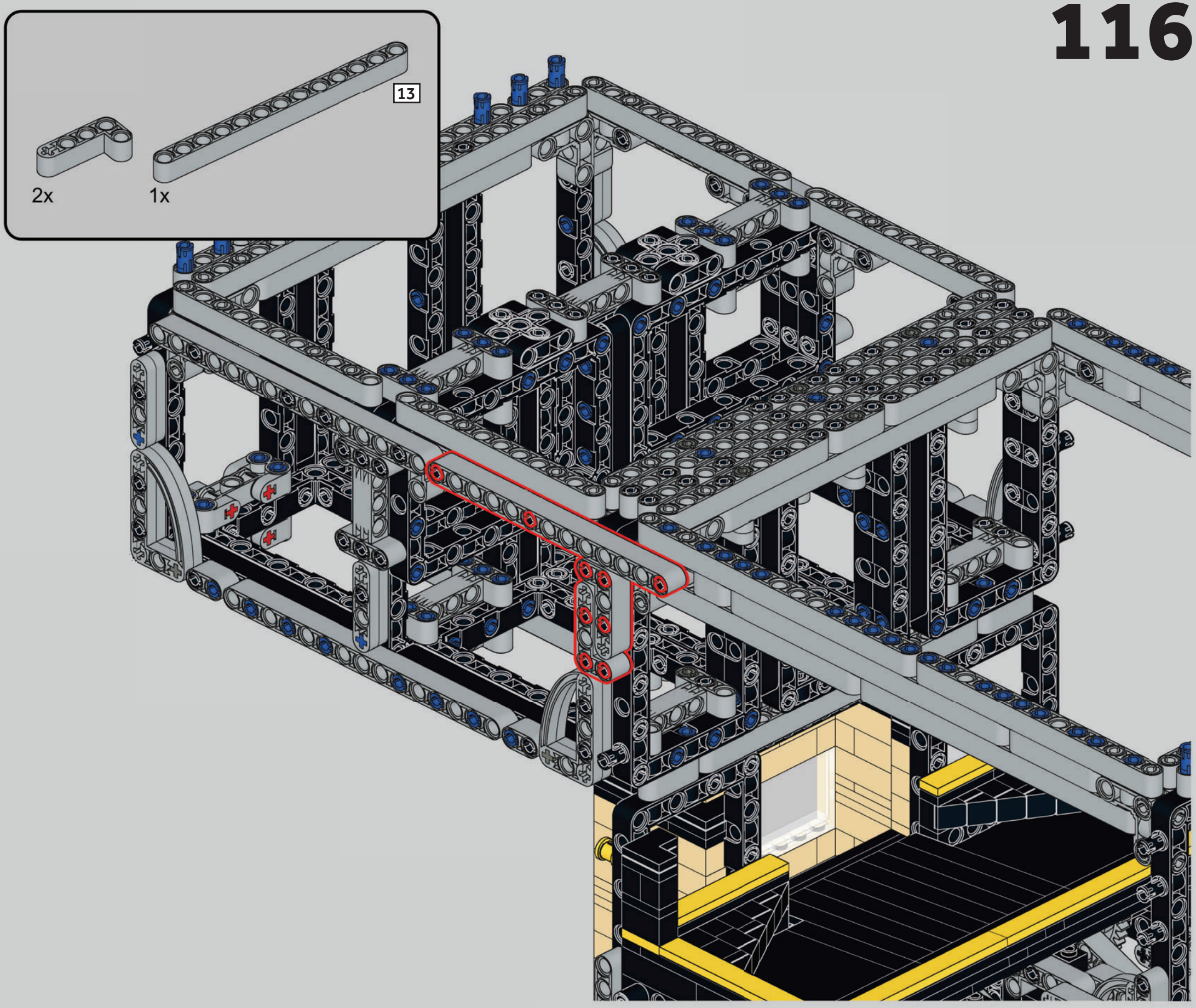

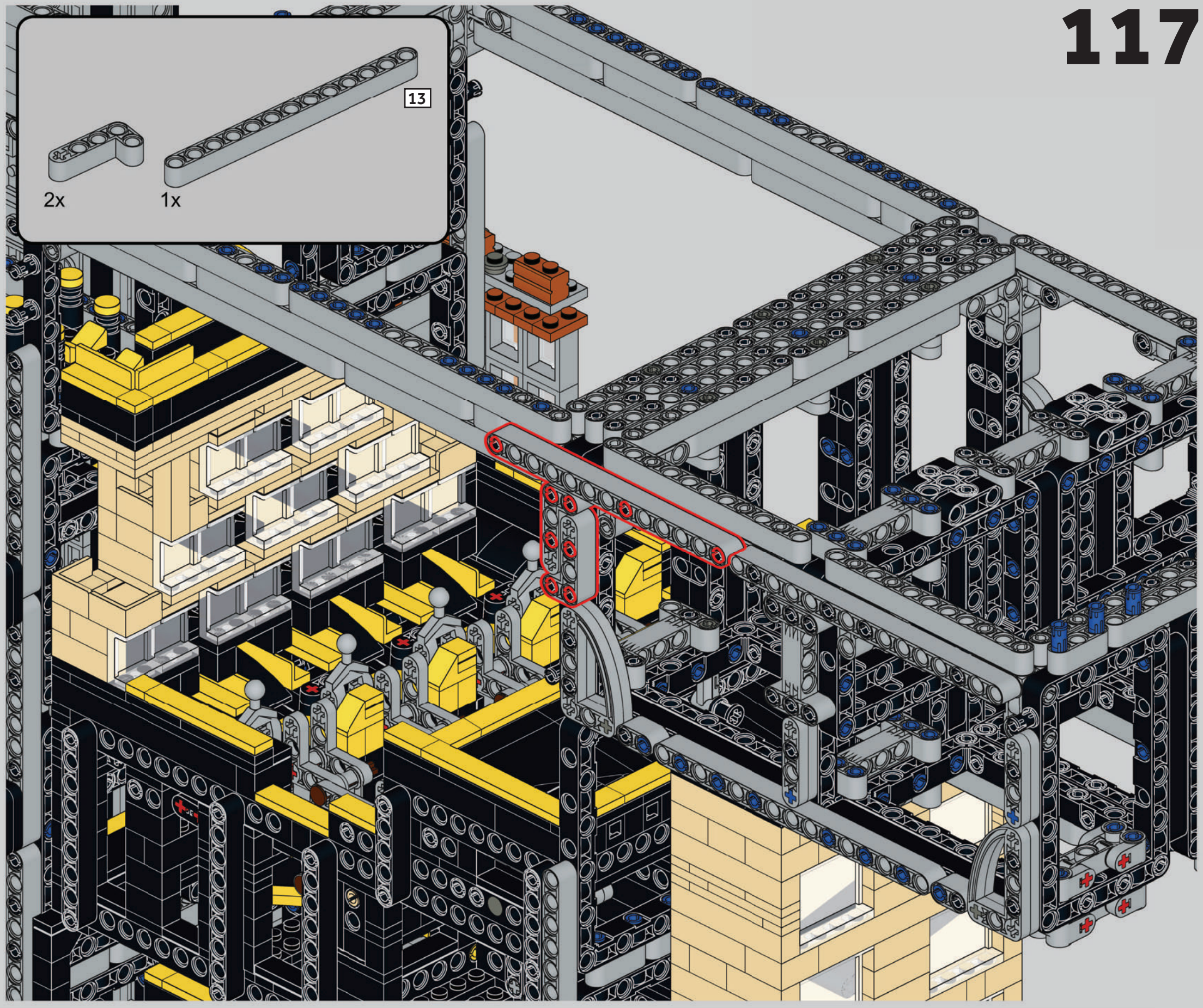
13
2x
1x

118

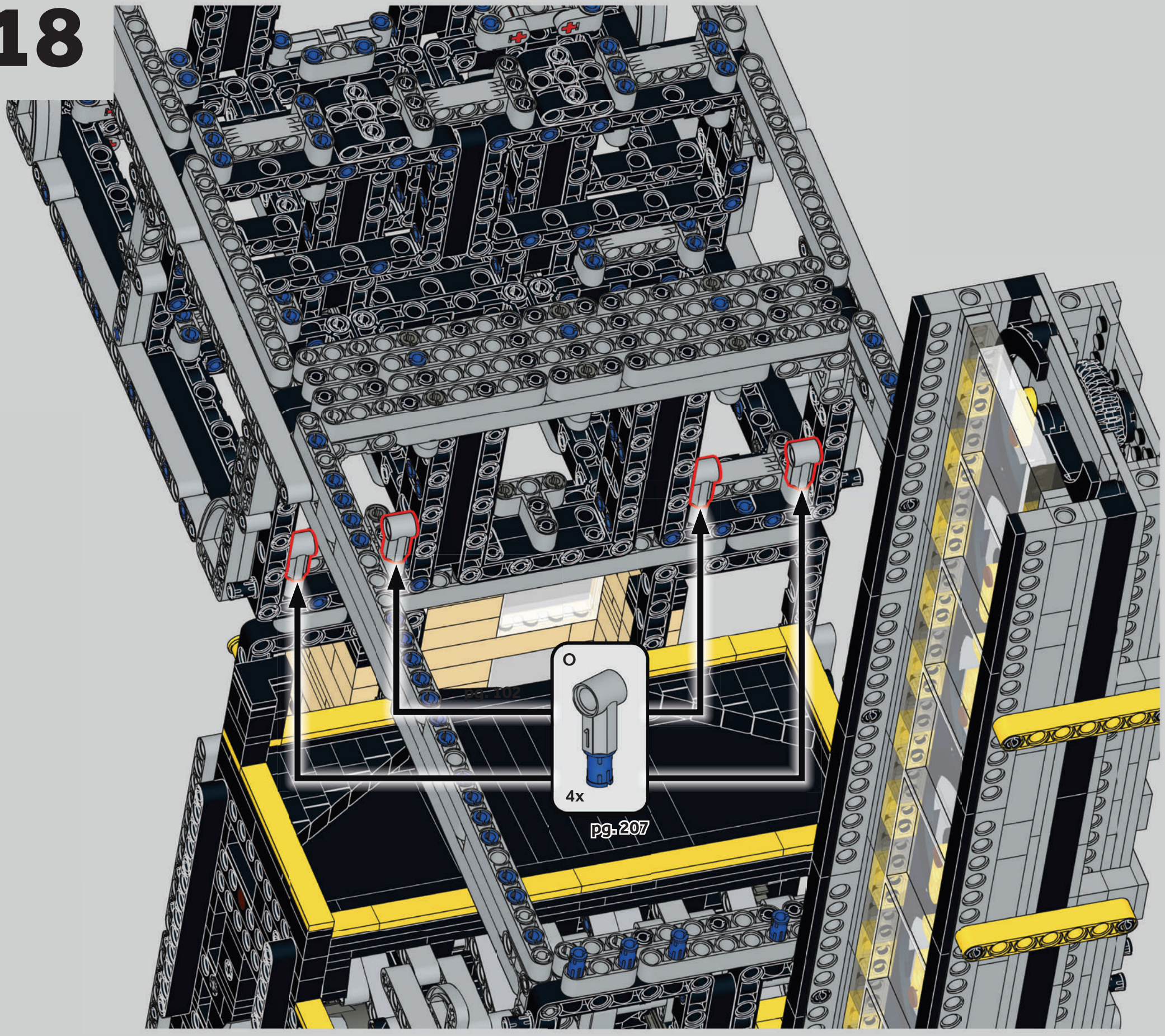

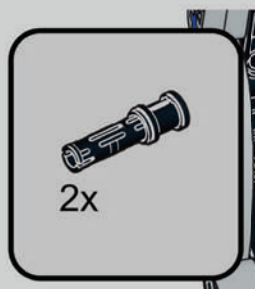
2x

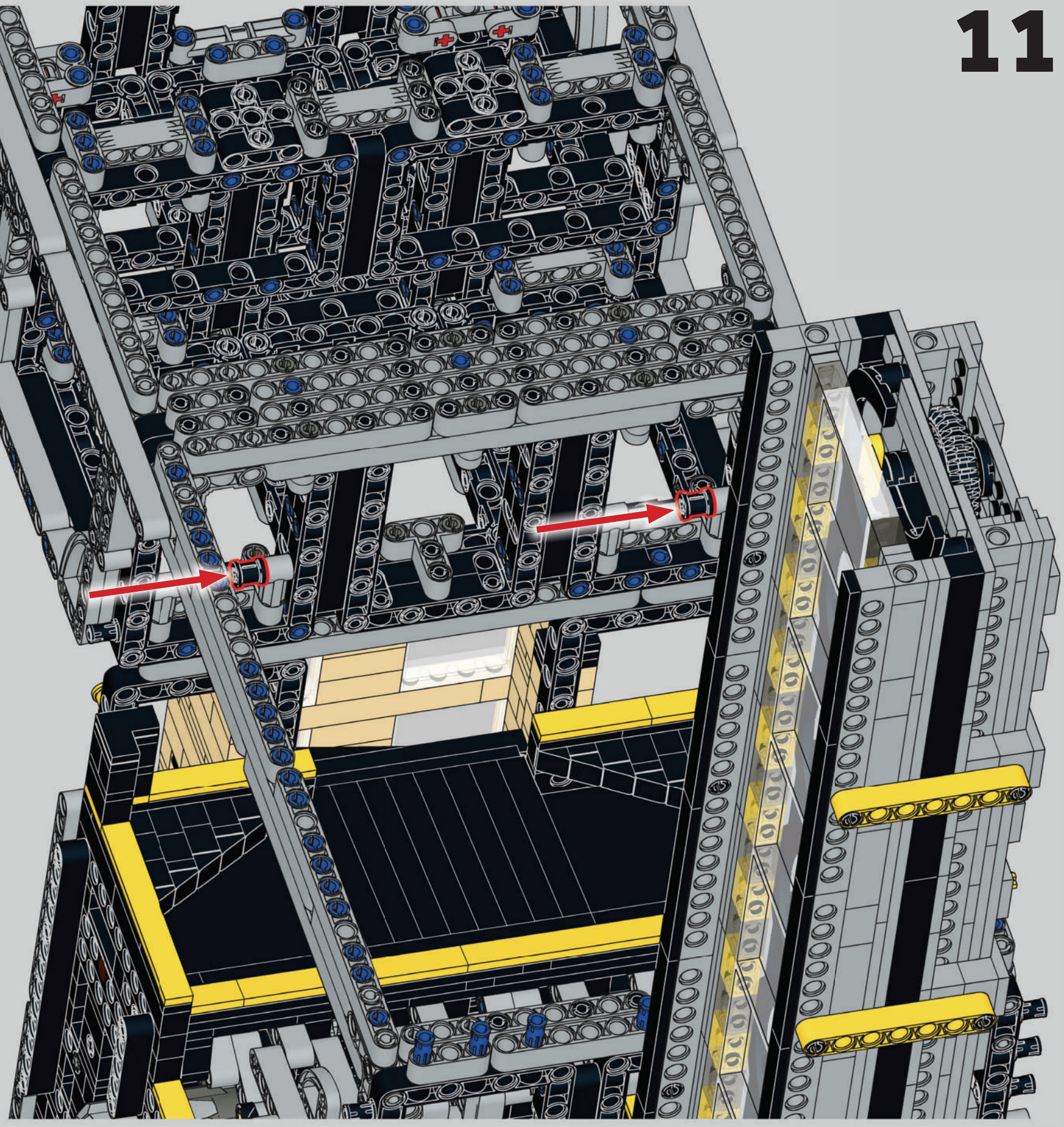

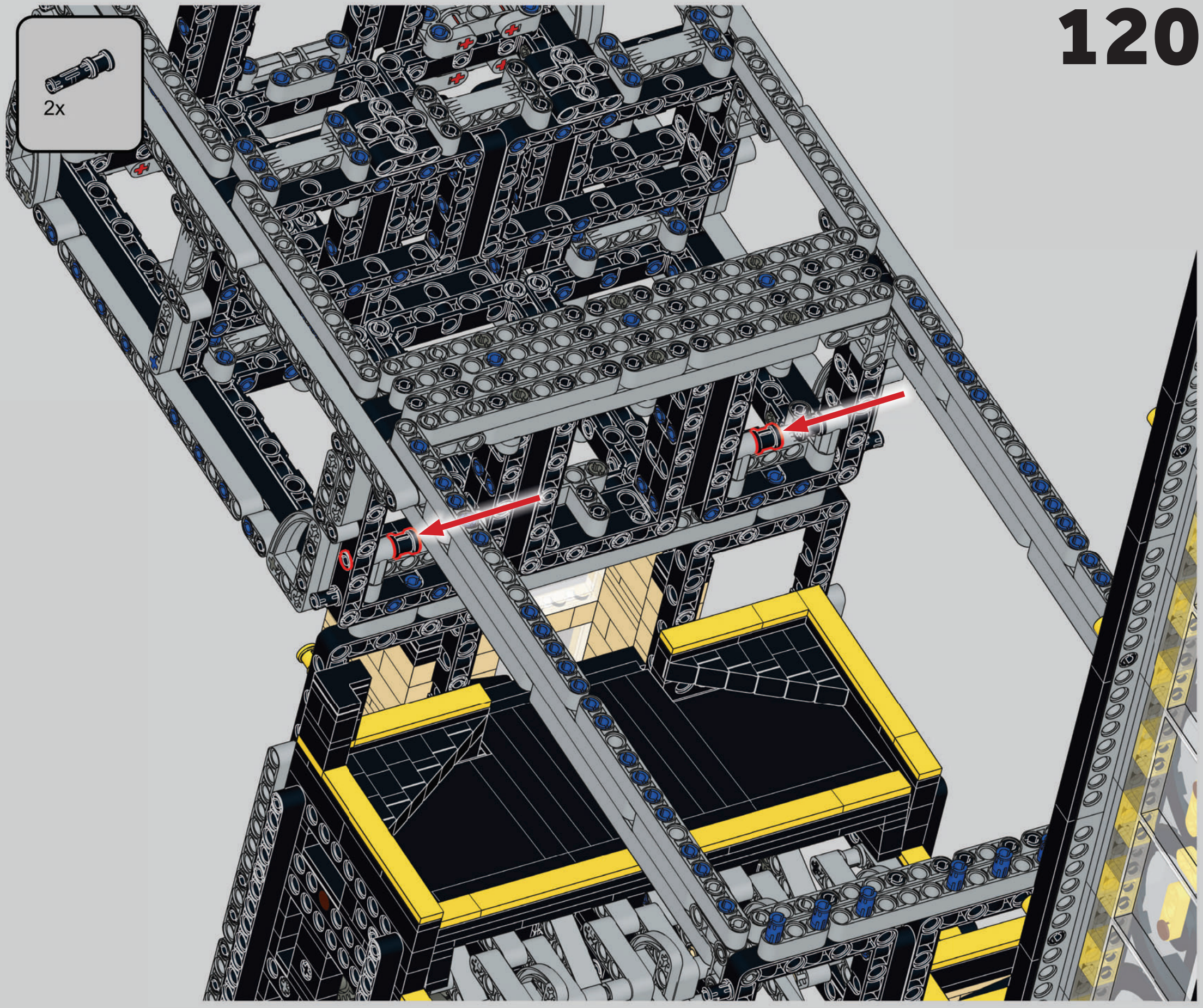
2x

121

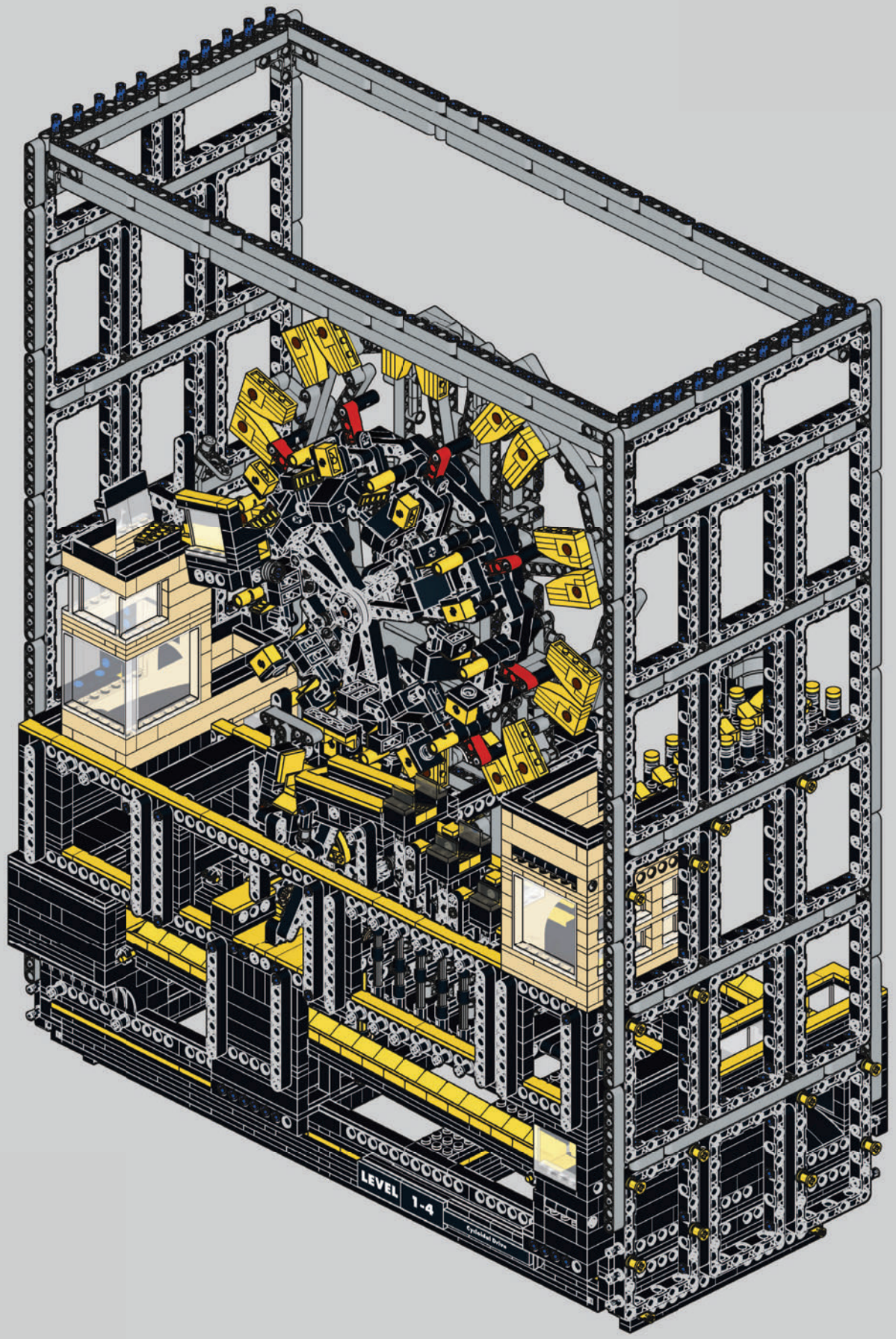

M
08

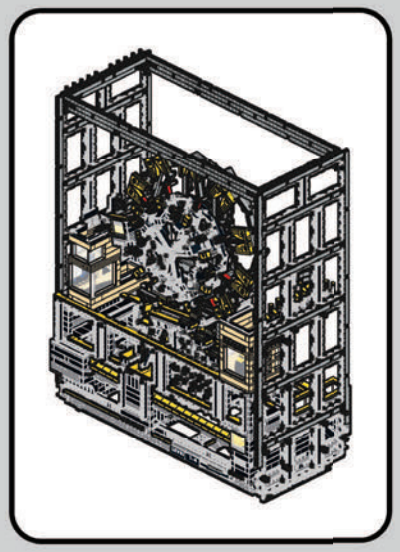

122

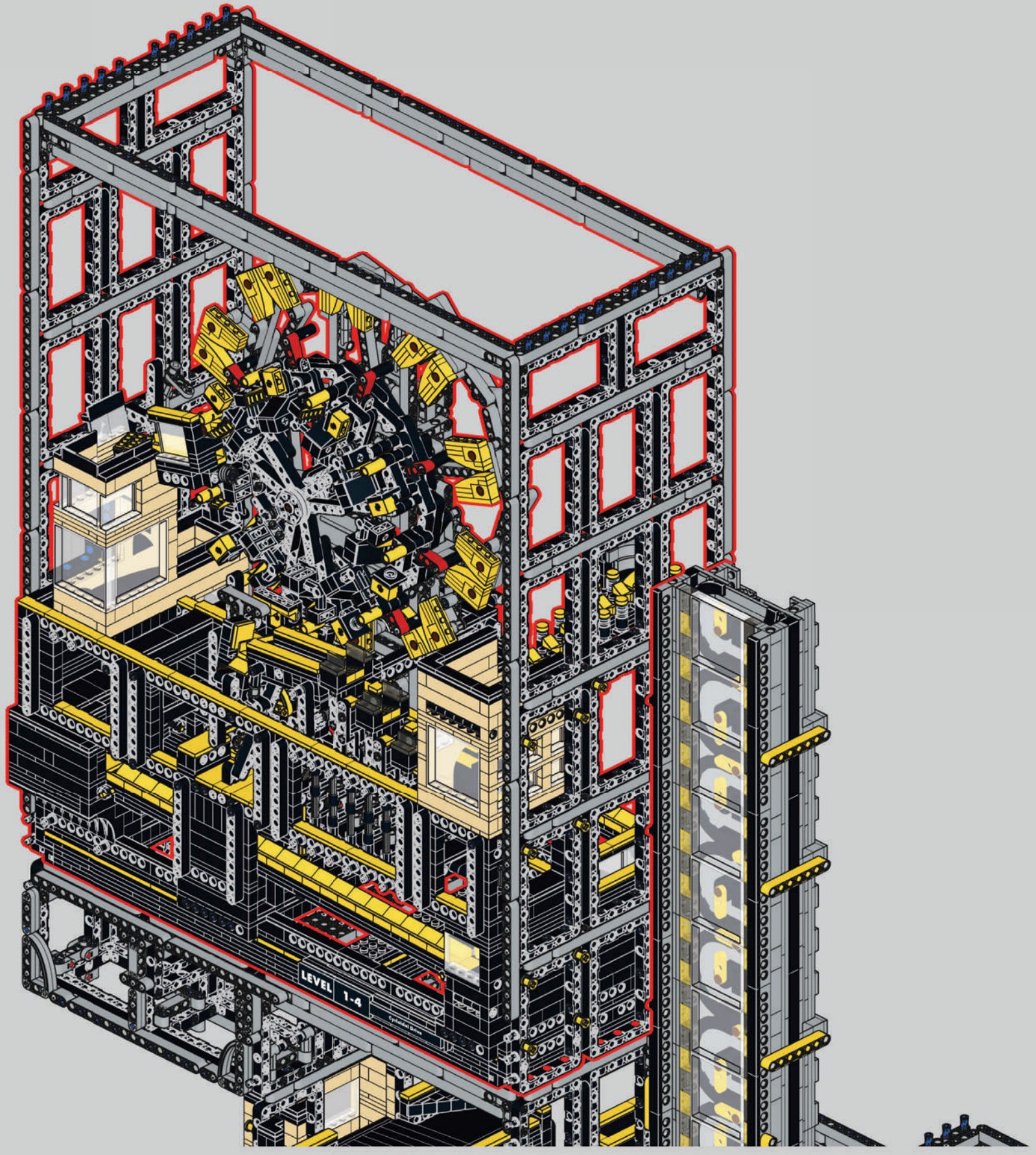

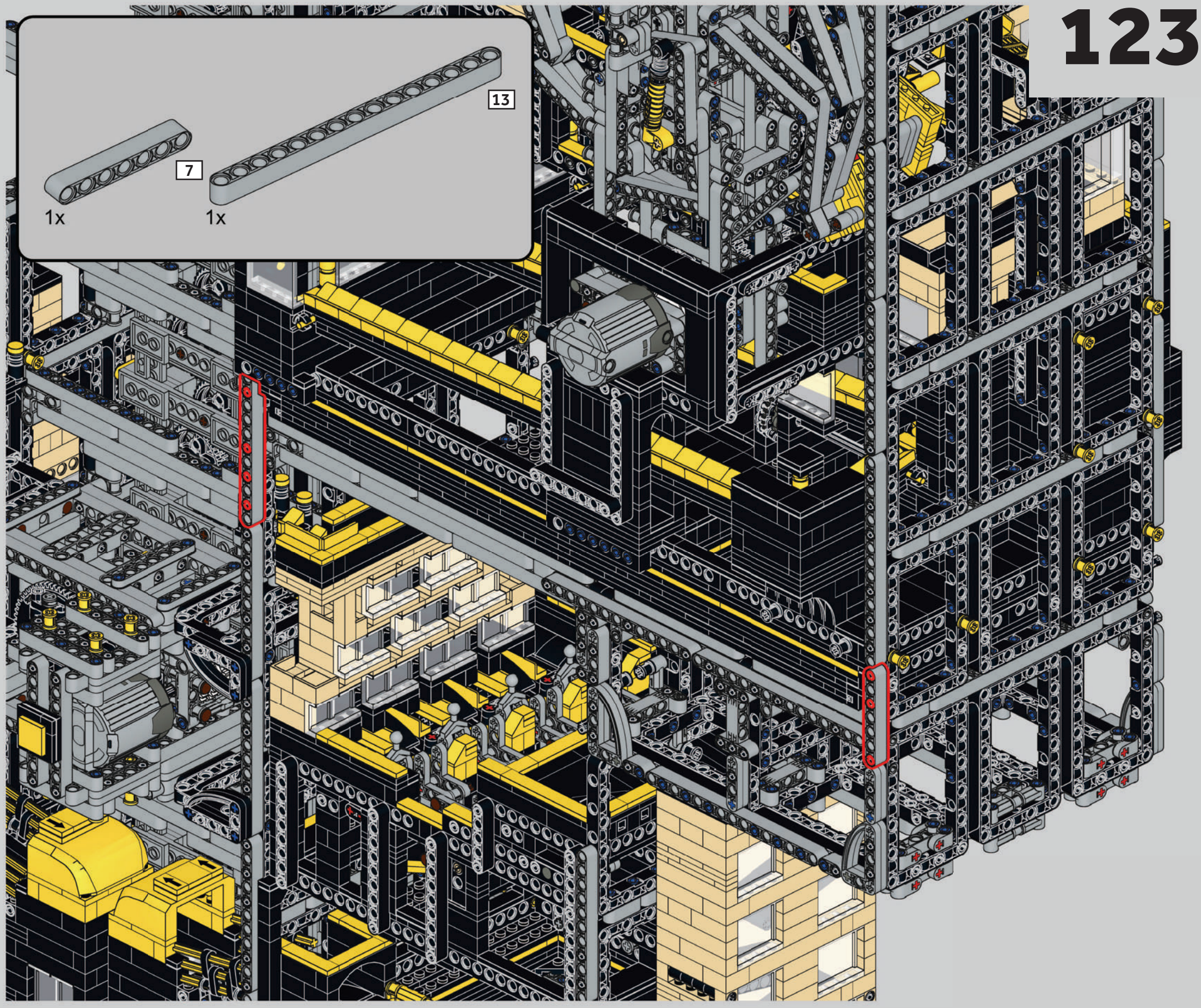
7
1x
13
1x

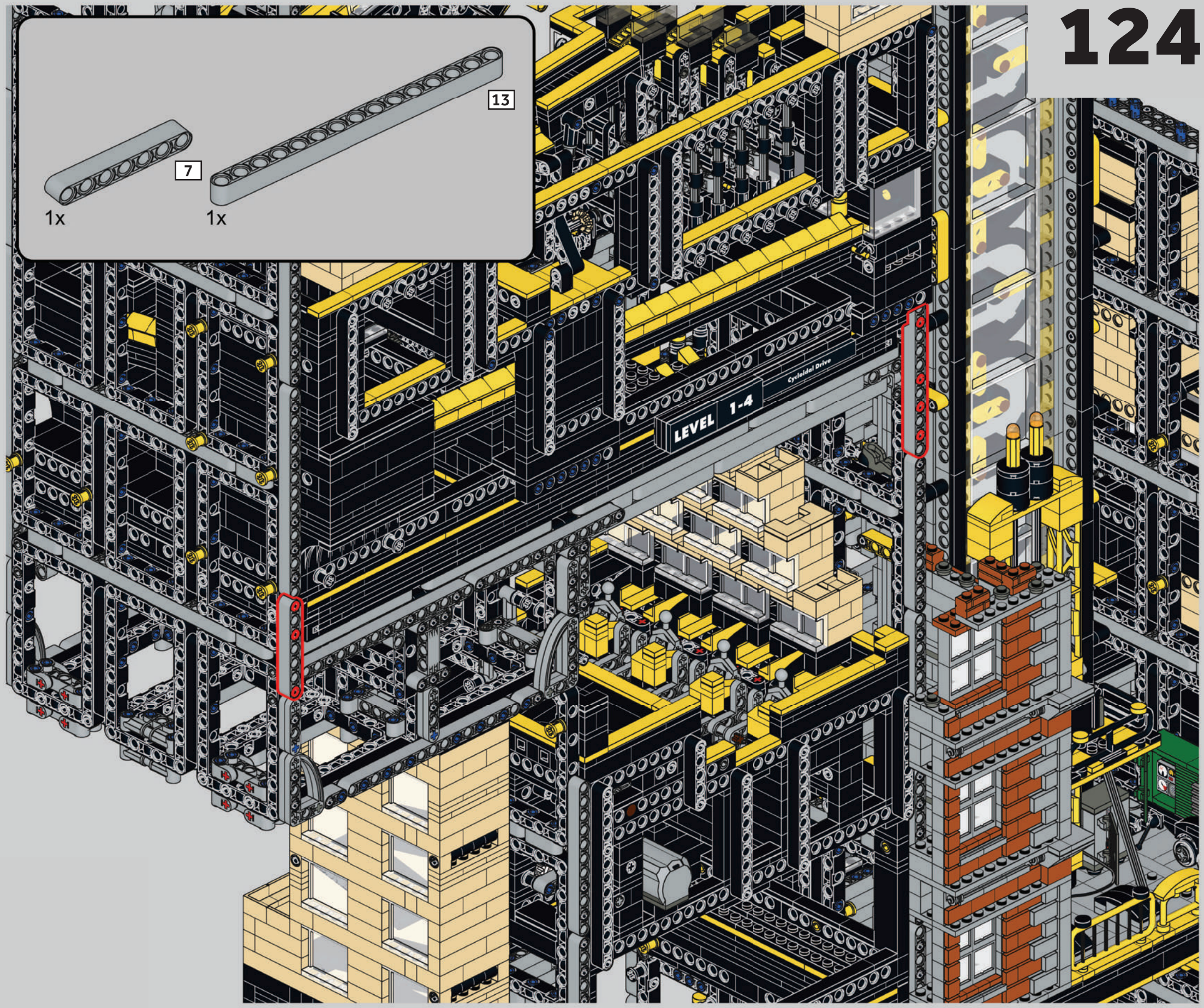
7
1x
13
1x
LEVEL 1-4
Cycloidal Drive

125

A
02

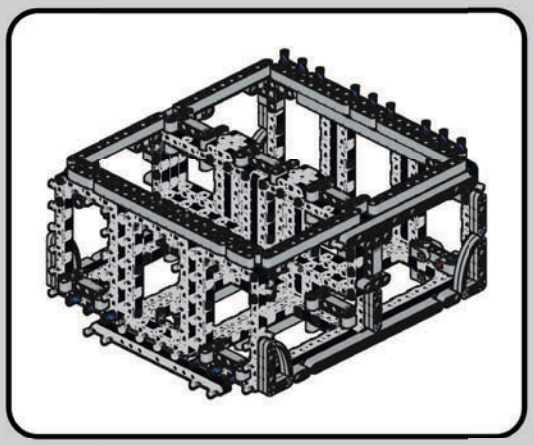

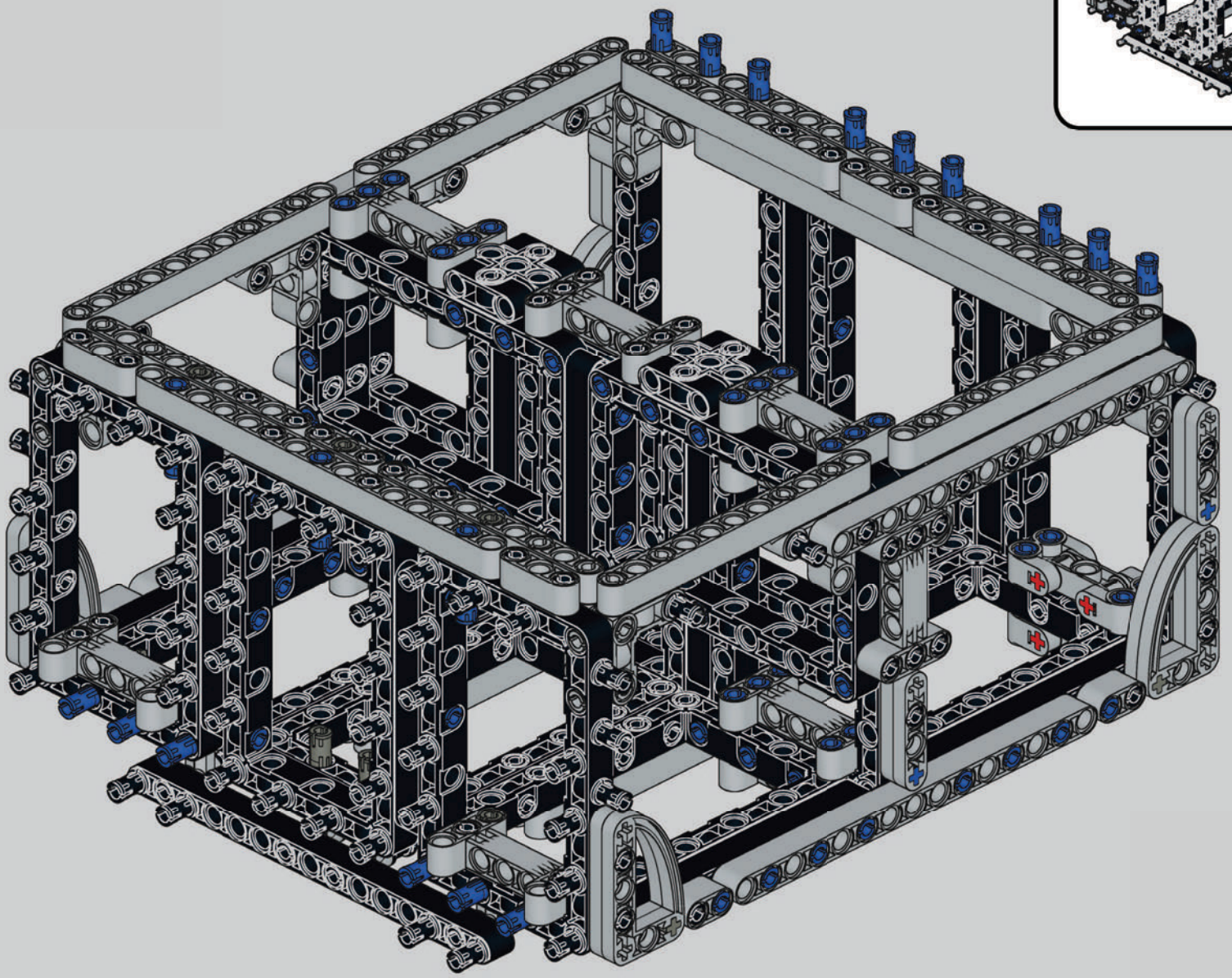

126

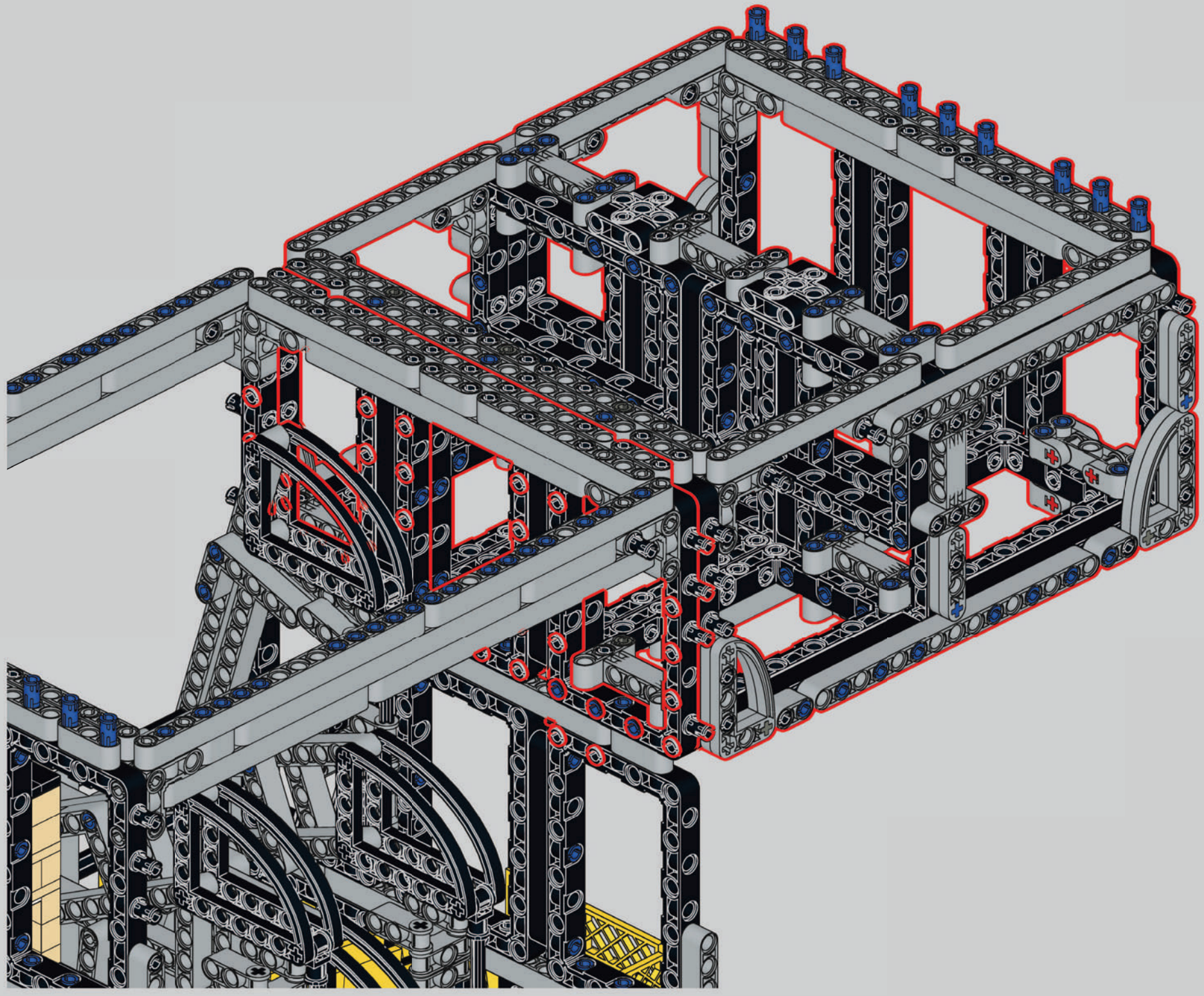

127

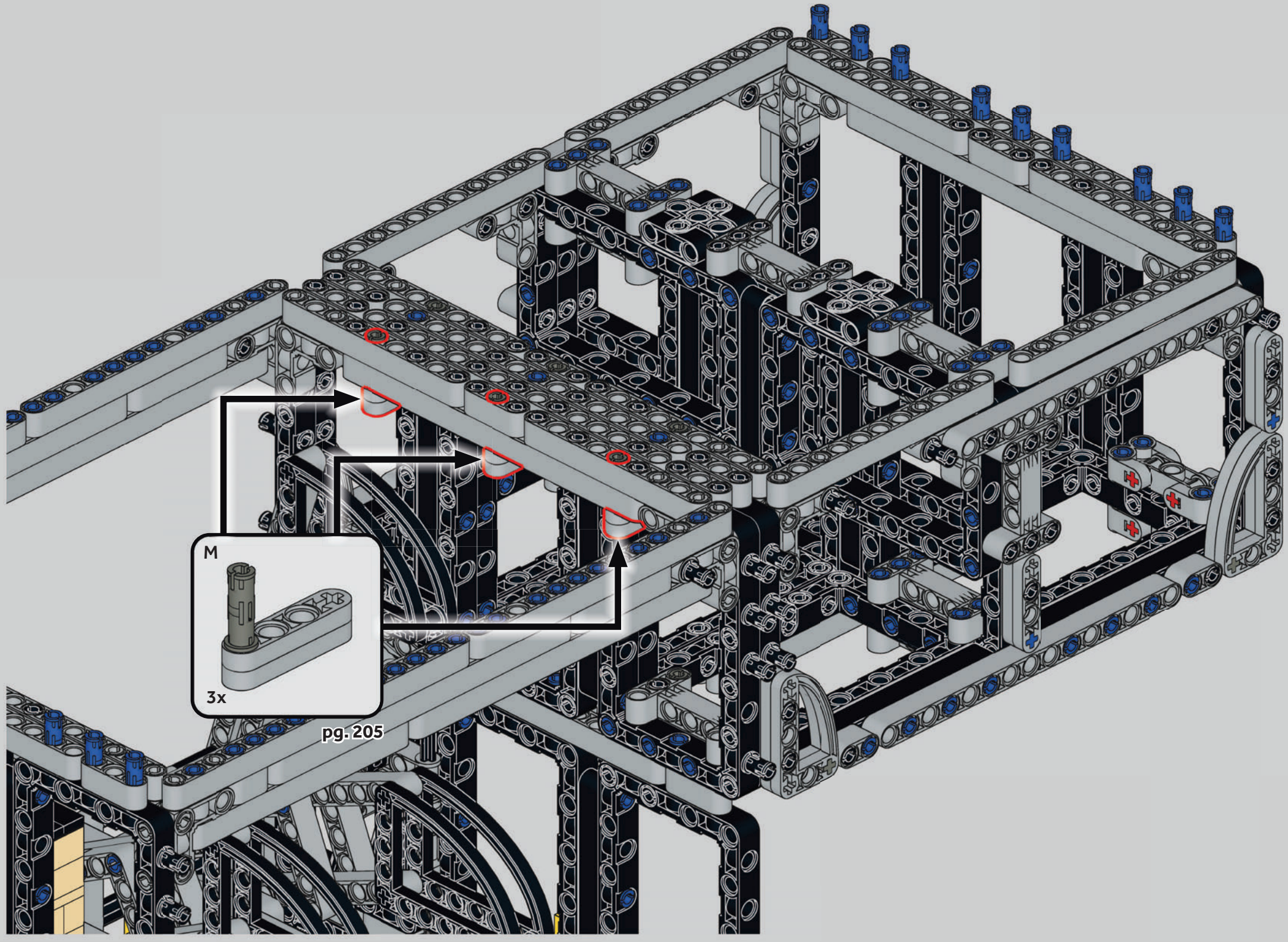

pg. 205

128

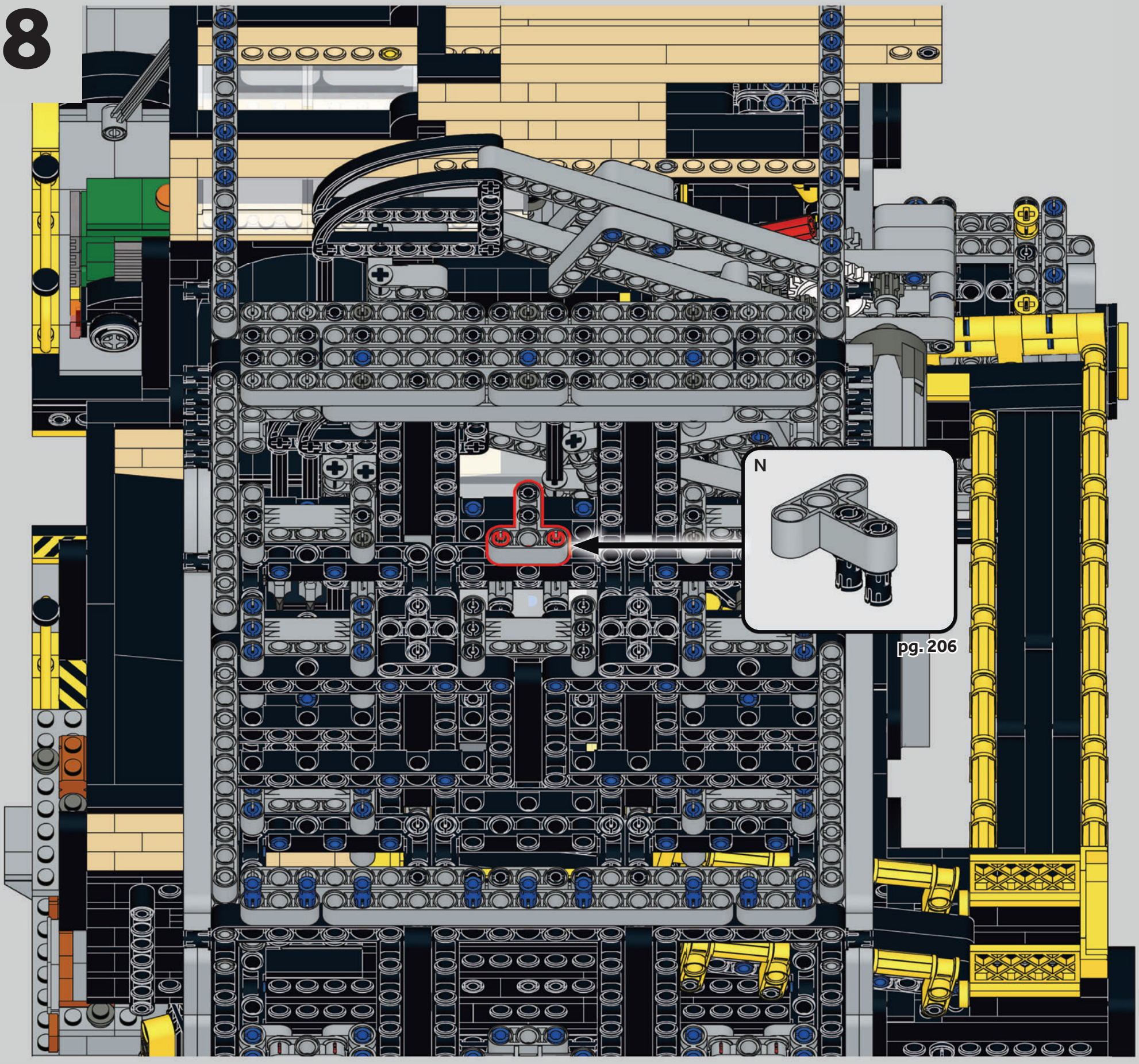

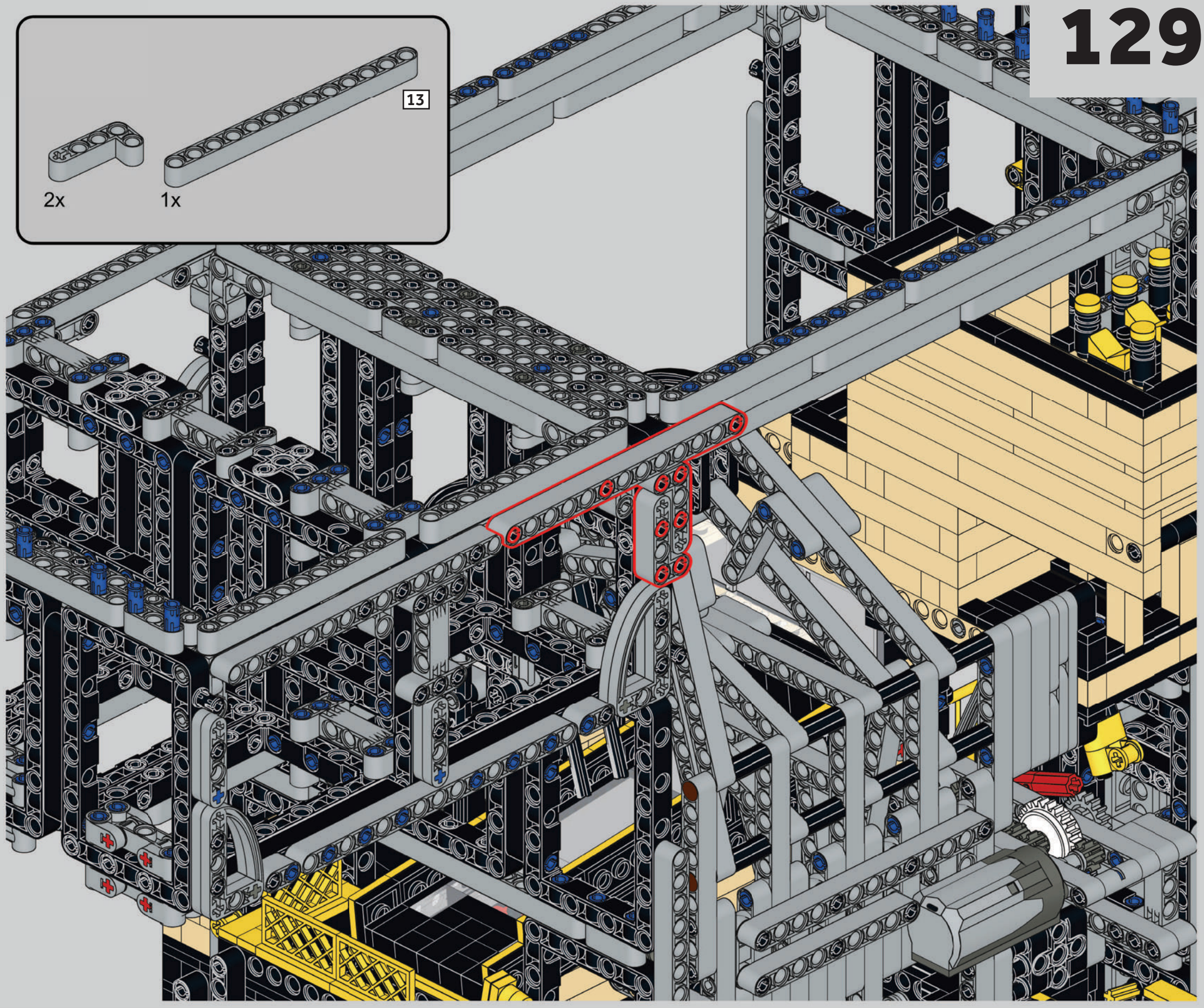
2x
1x
13

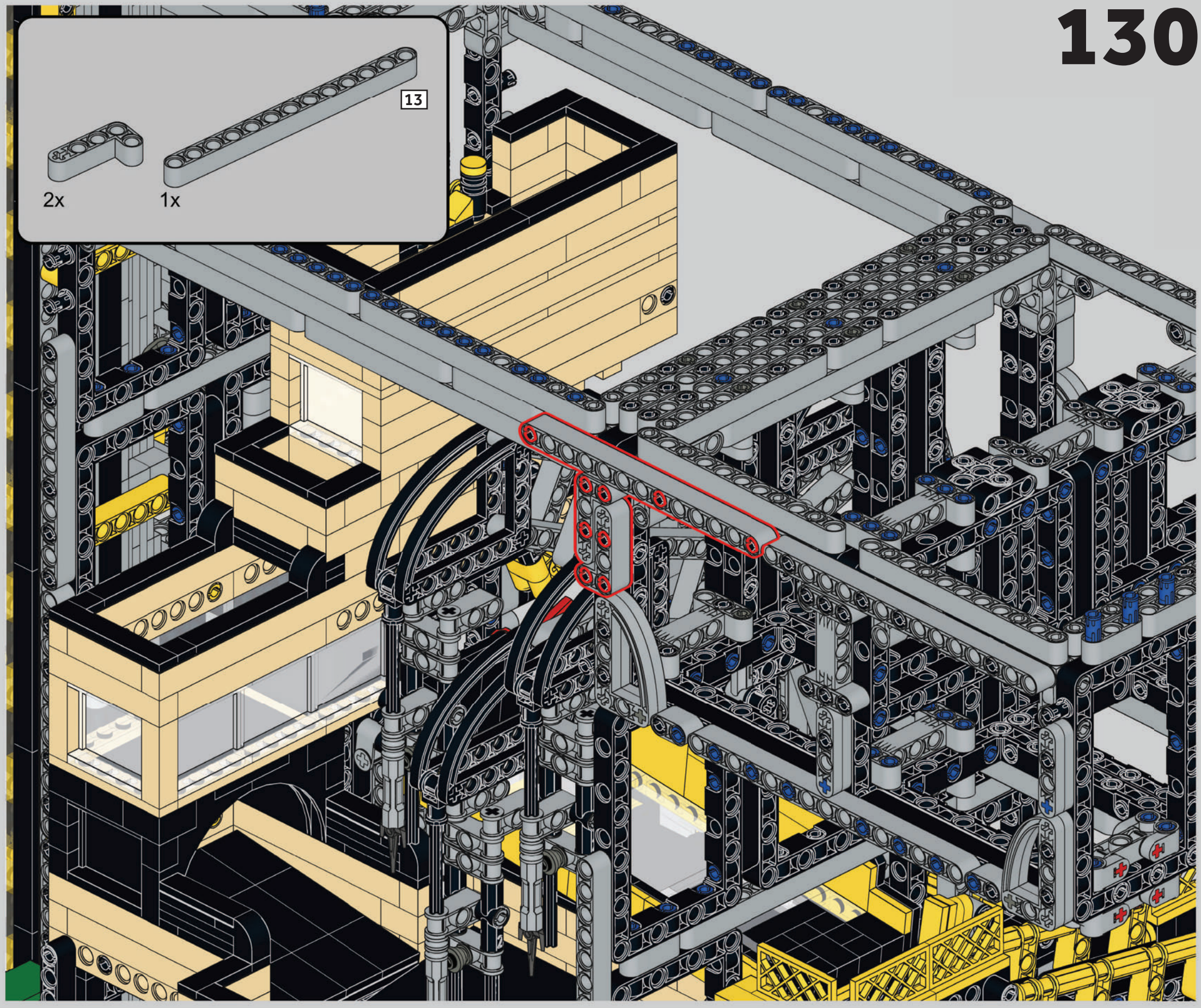
13
2x
1x

131

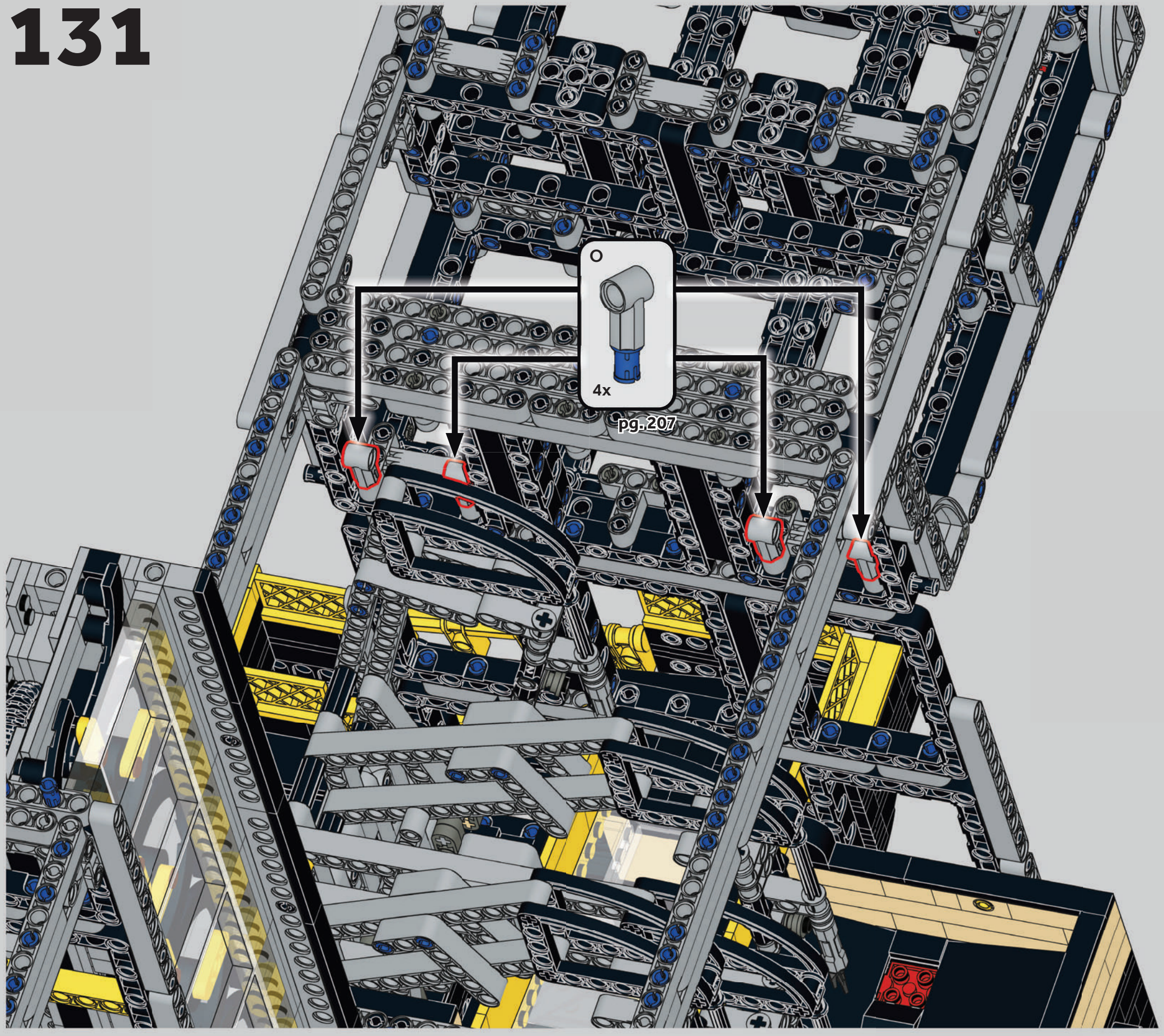


2x


2x

134

M
09

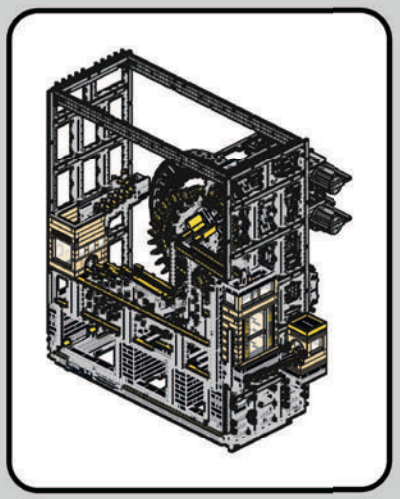

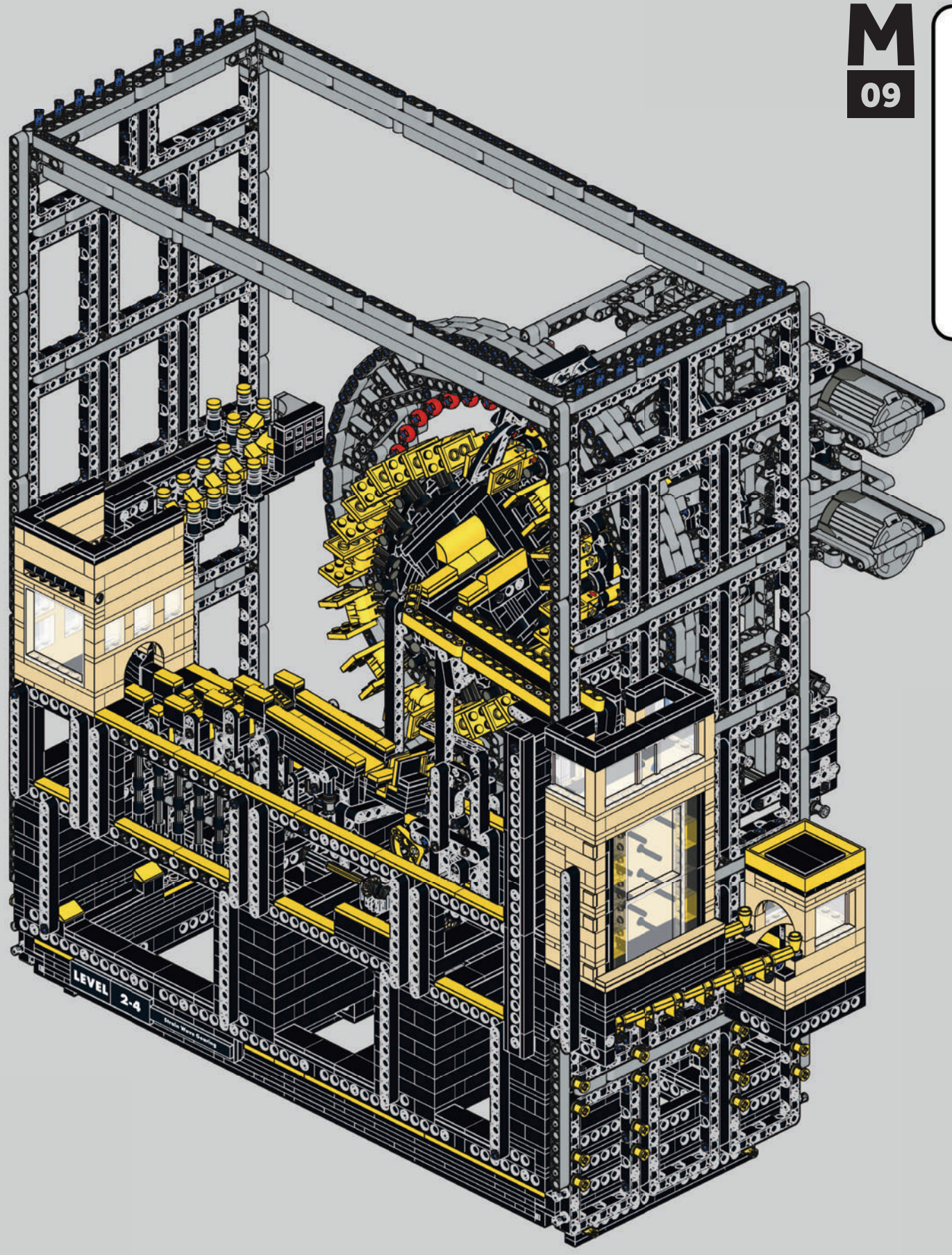

135

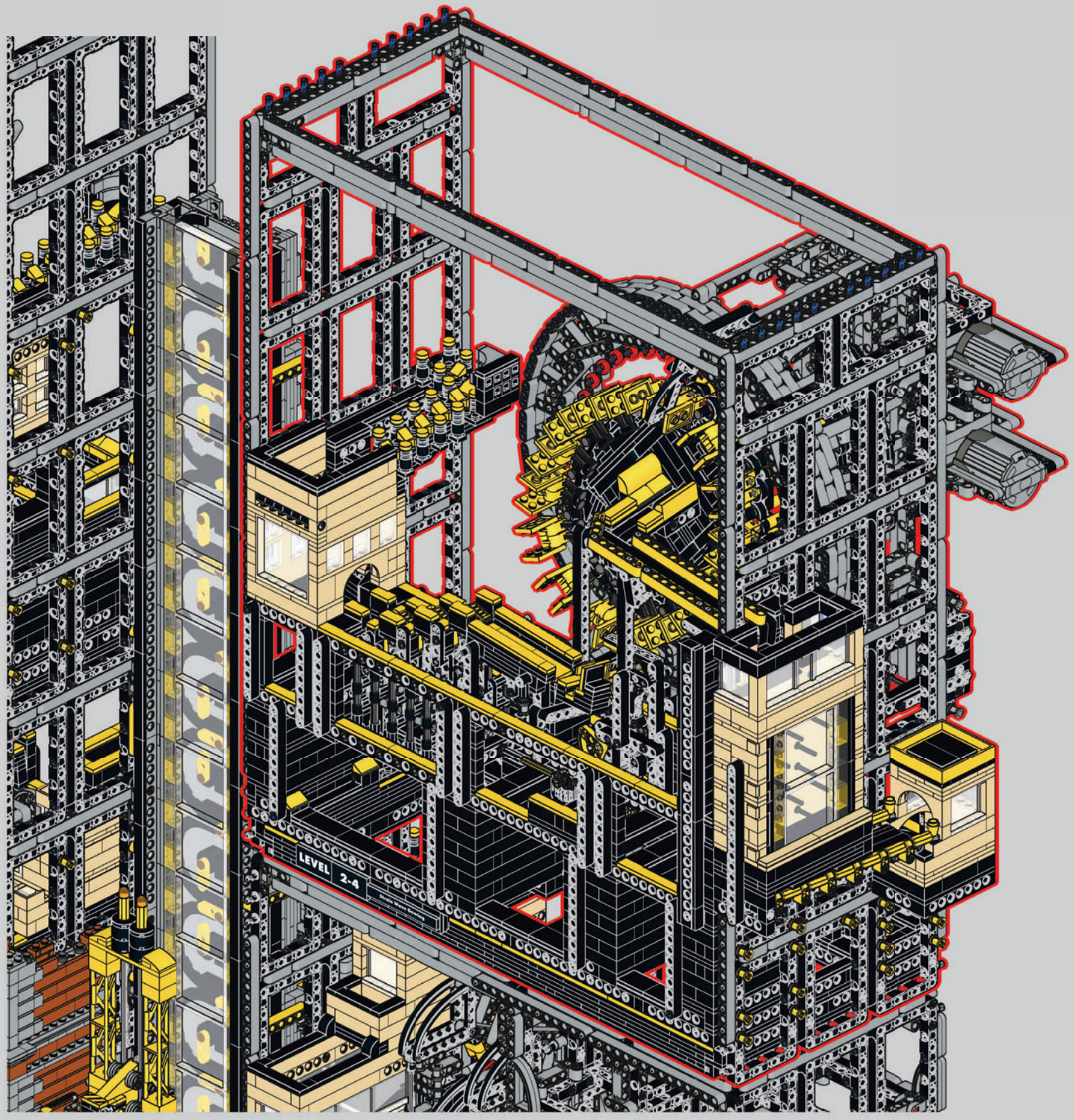

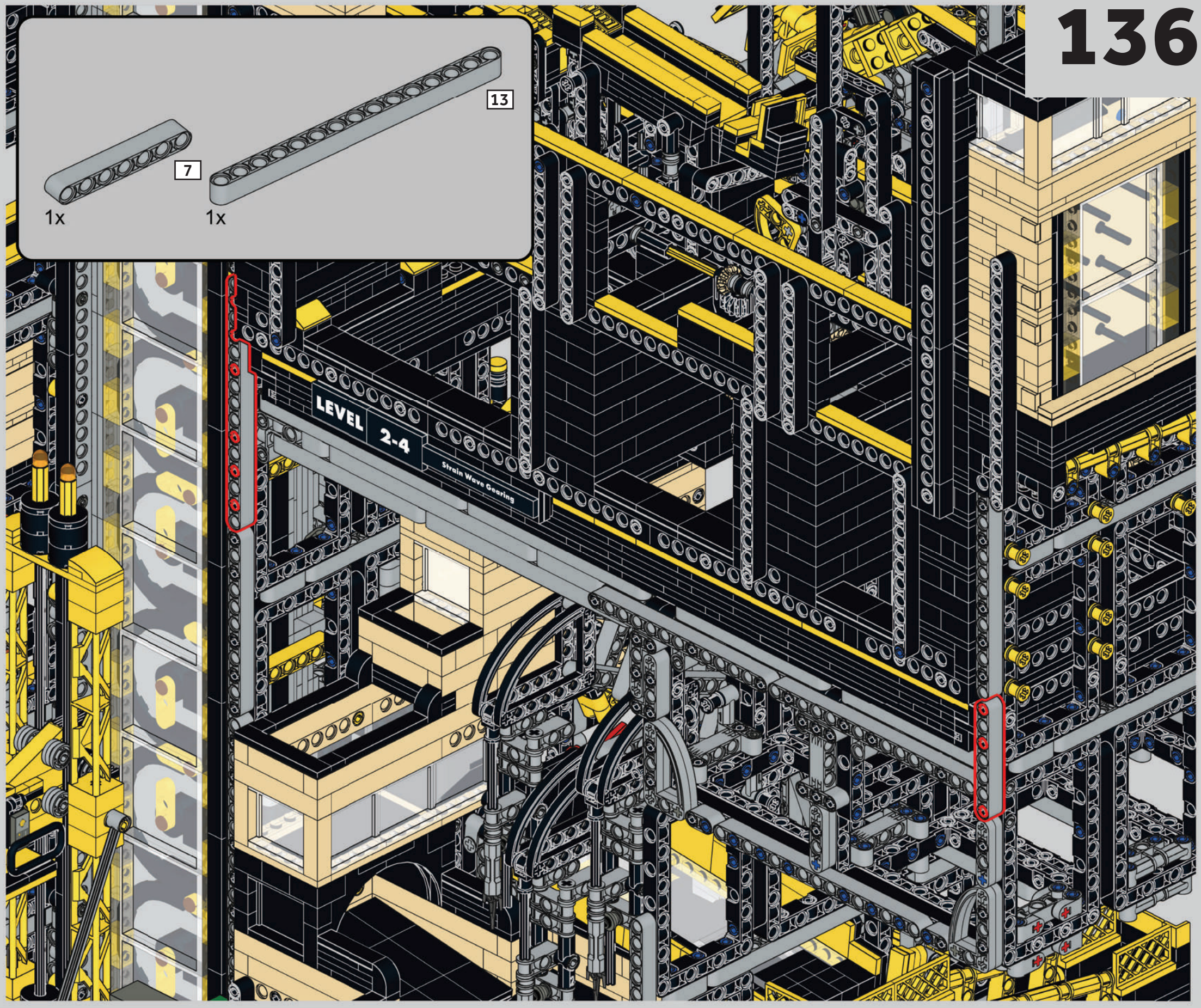
7
1x
13
1x
LEVEL 2-4
Strain Wave Gearing

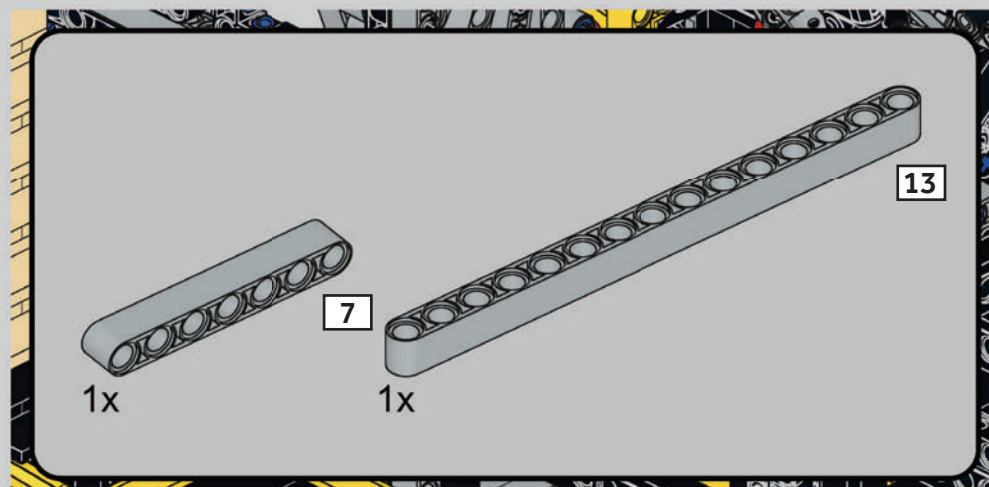
7
1x
13
1x

138

S
03

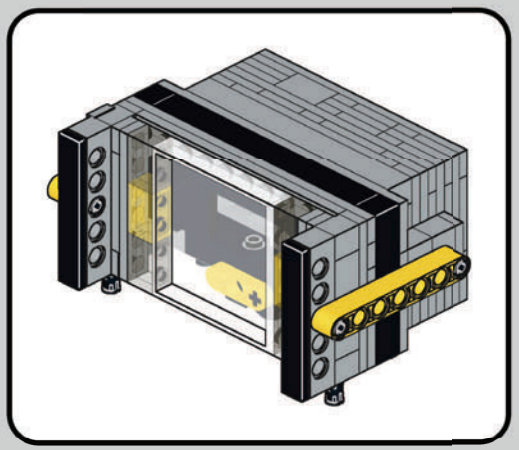

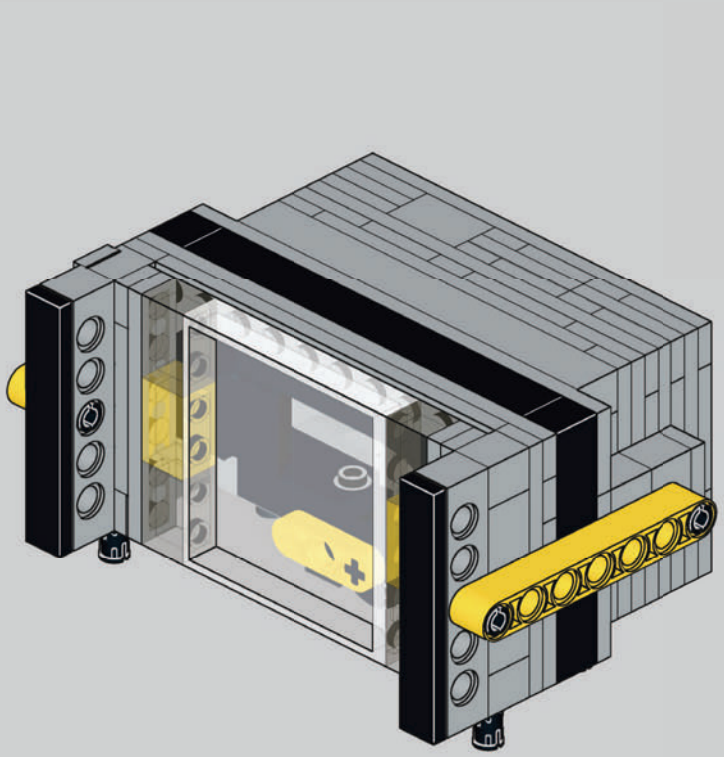

139

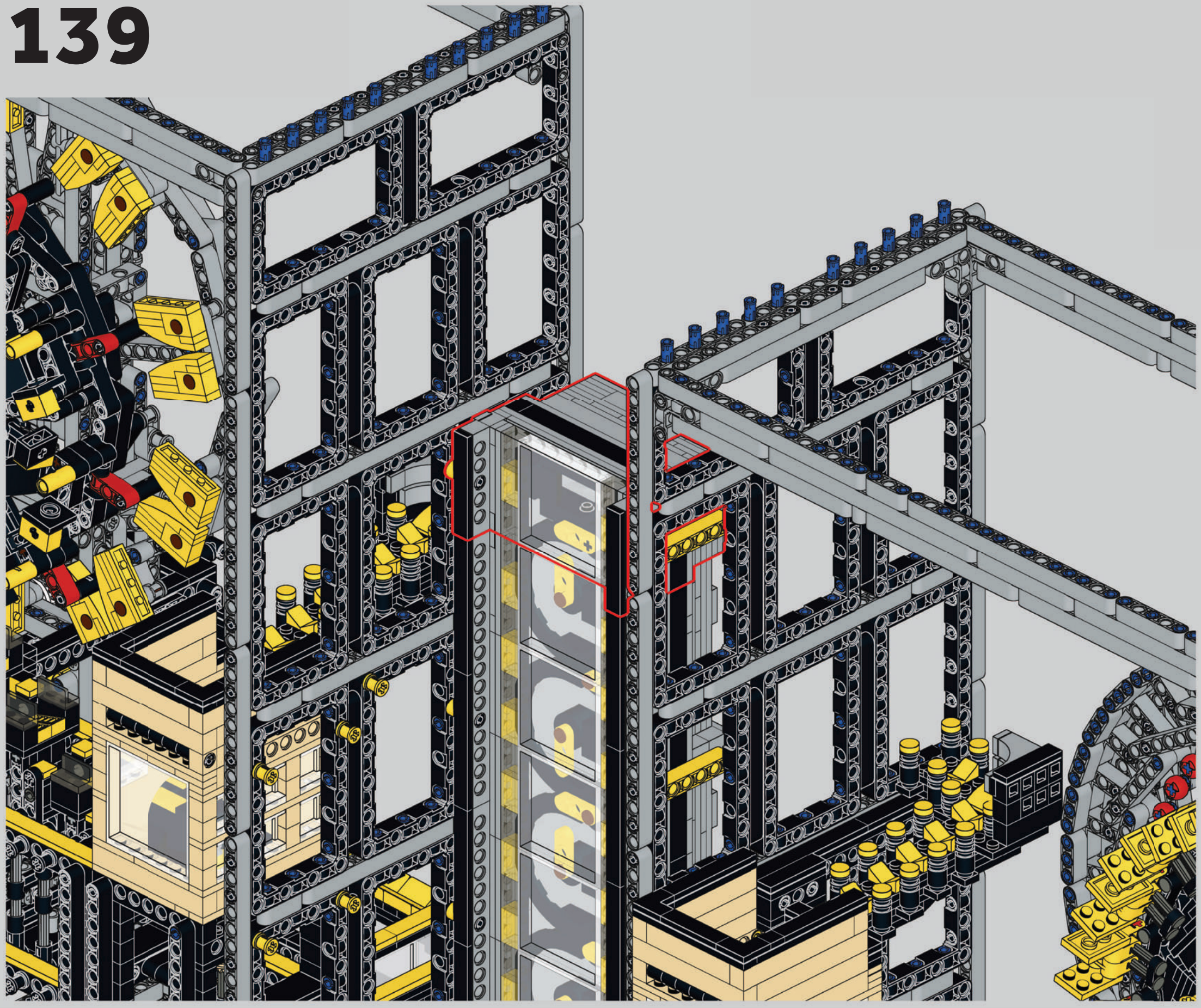

140

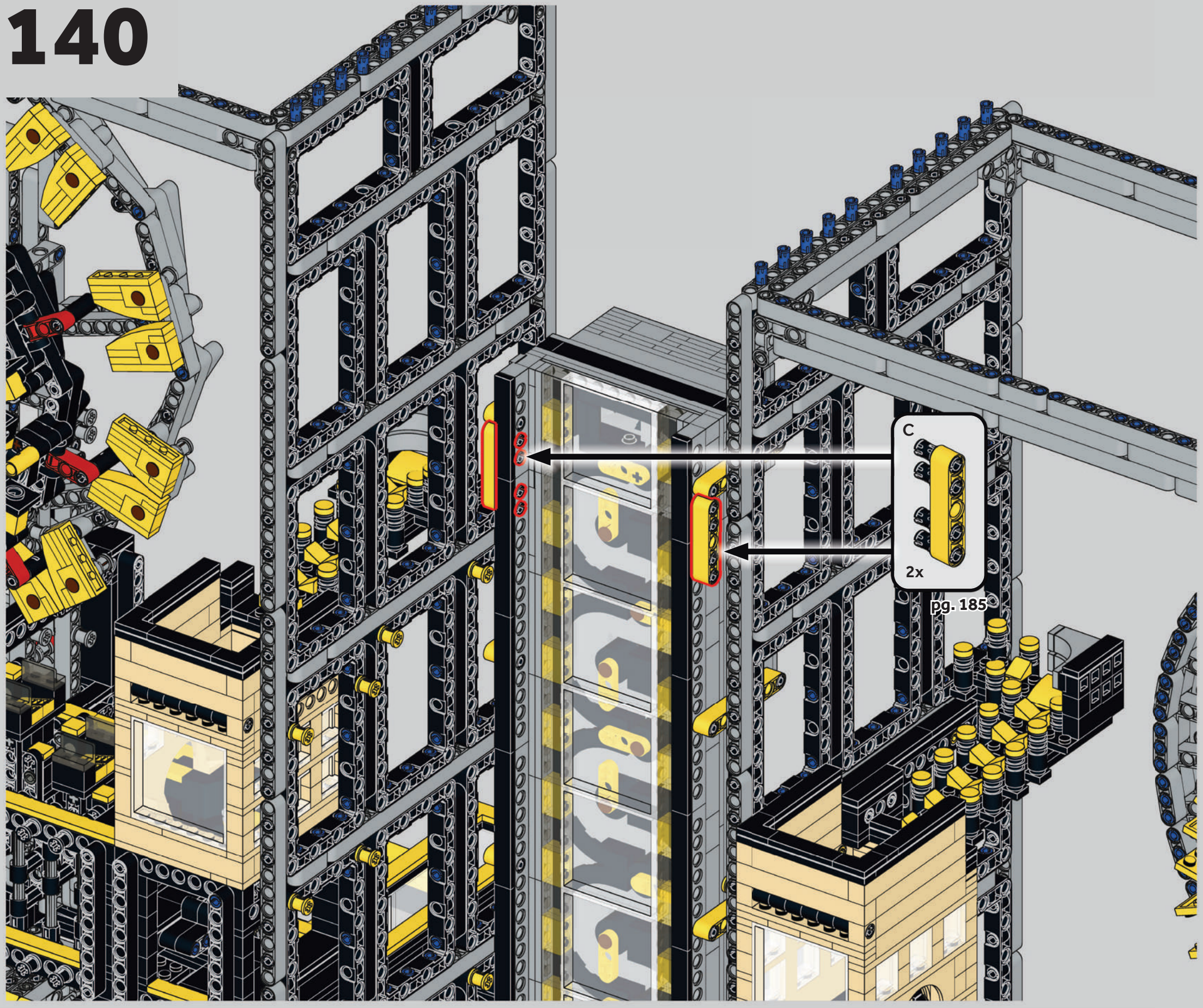

141

A
01

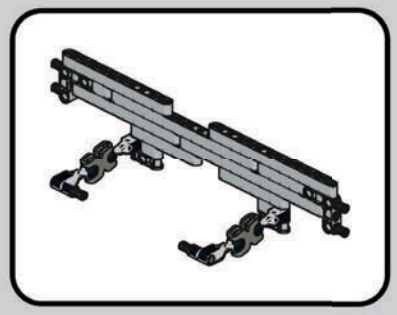

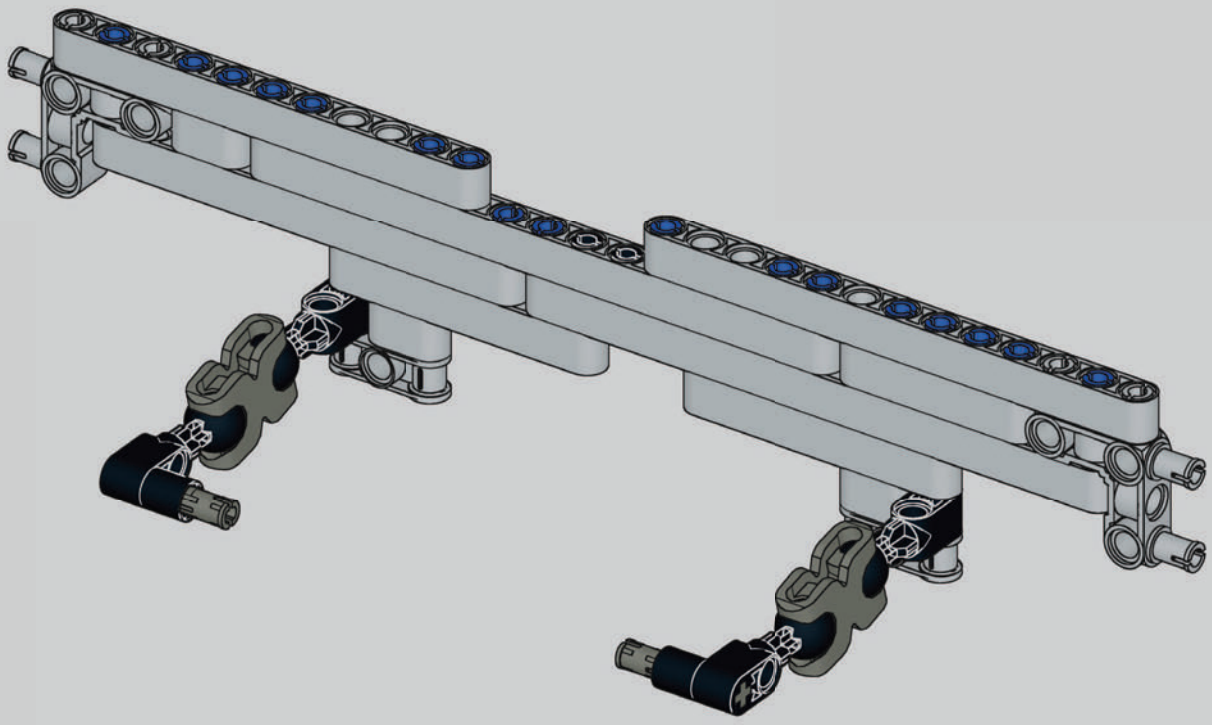

142

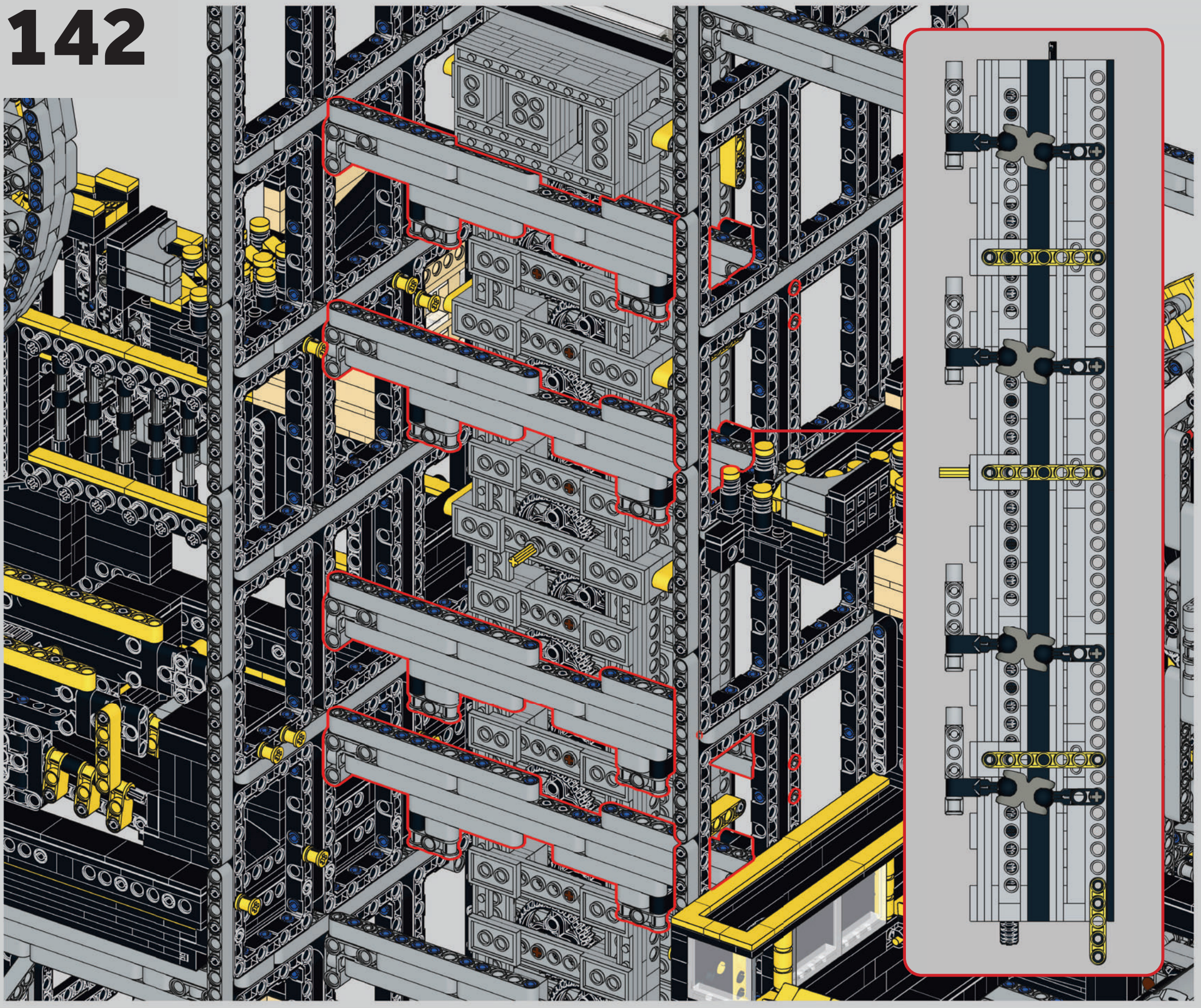

143

T
01

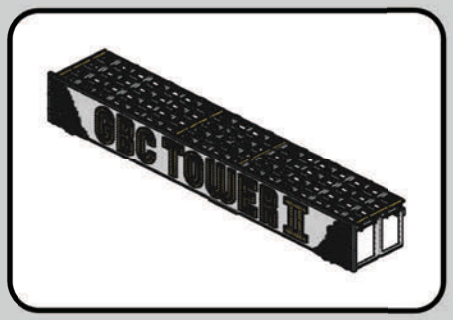

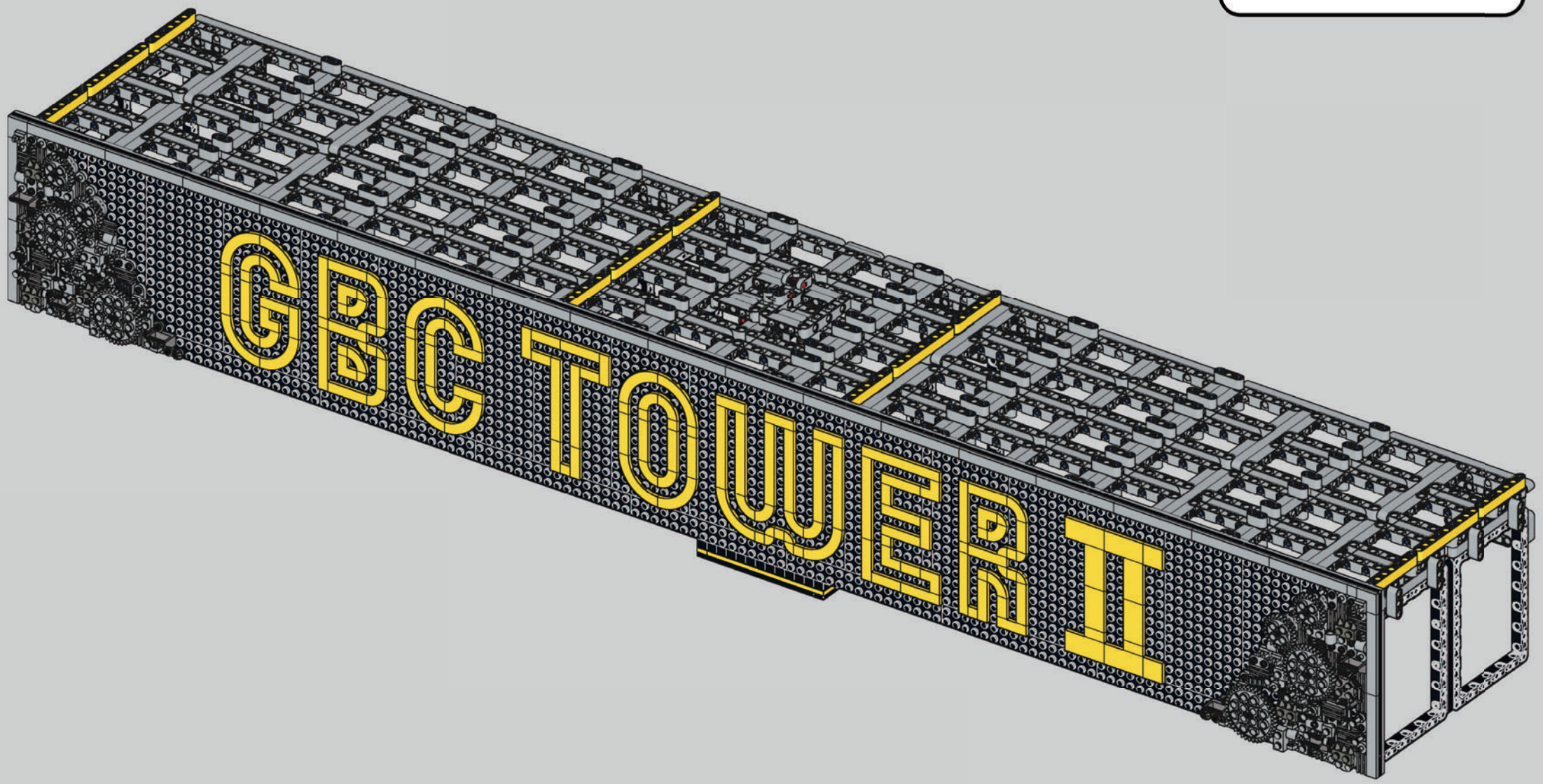

144

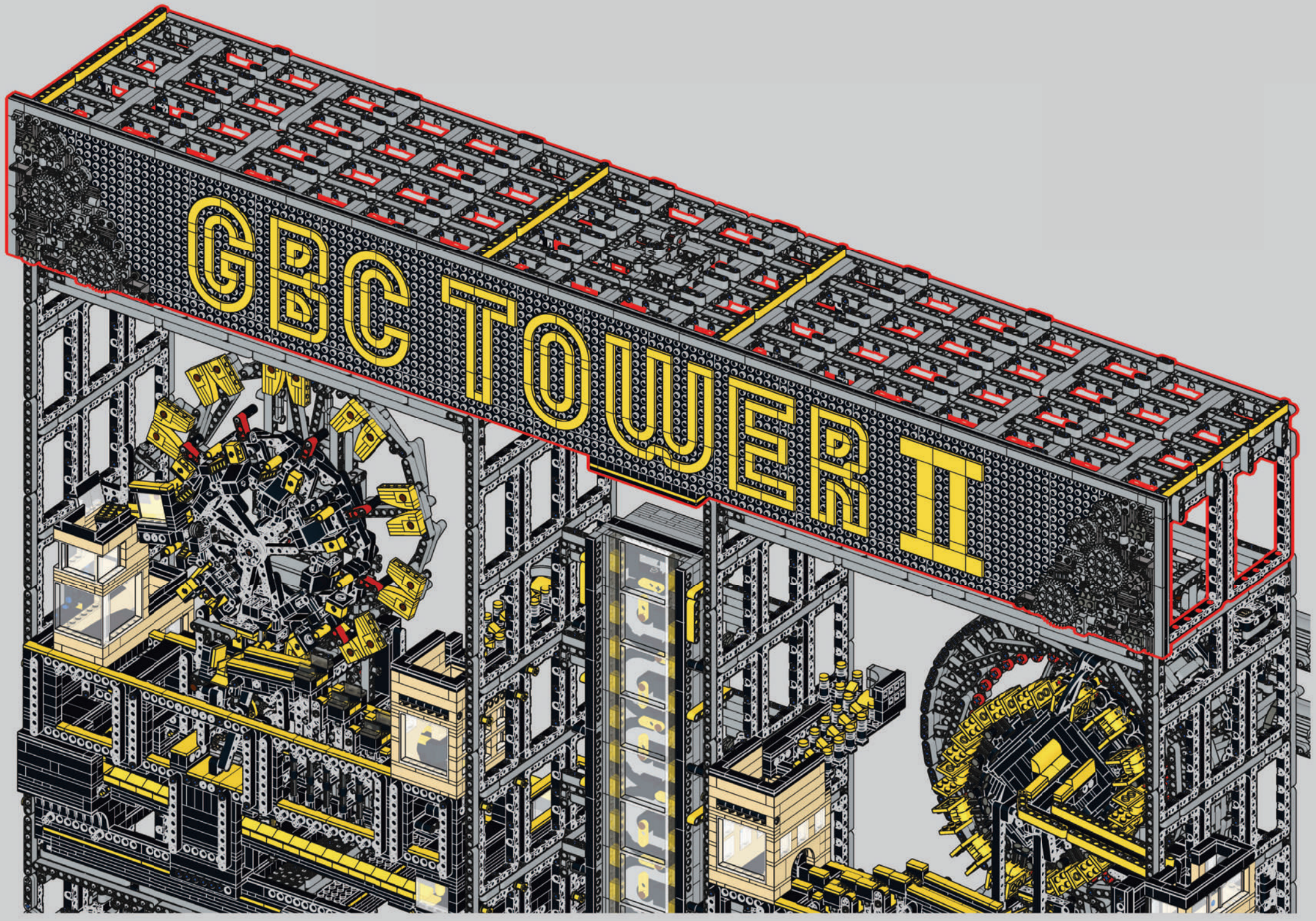

145

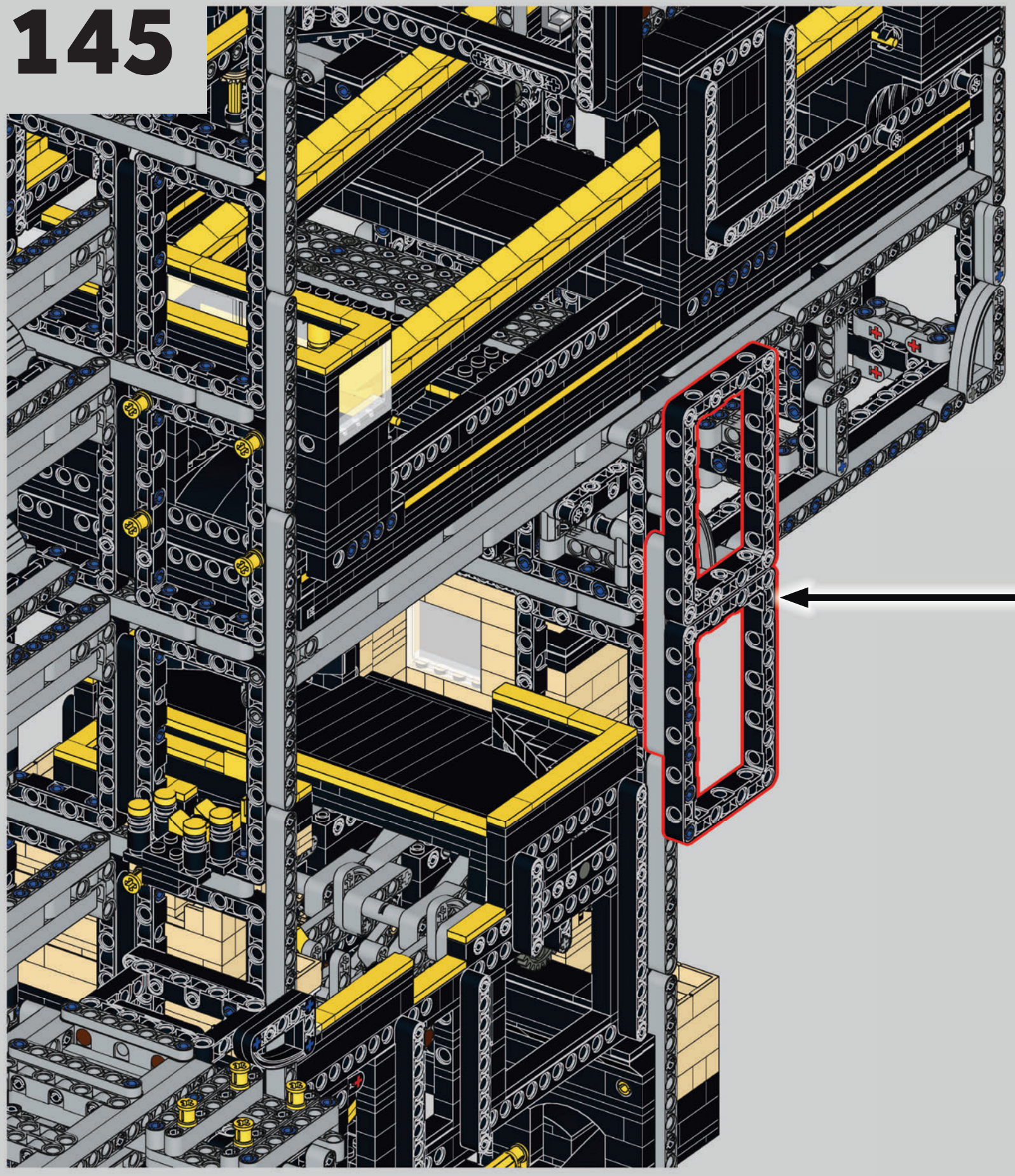

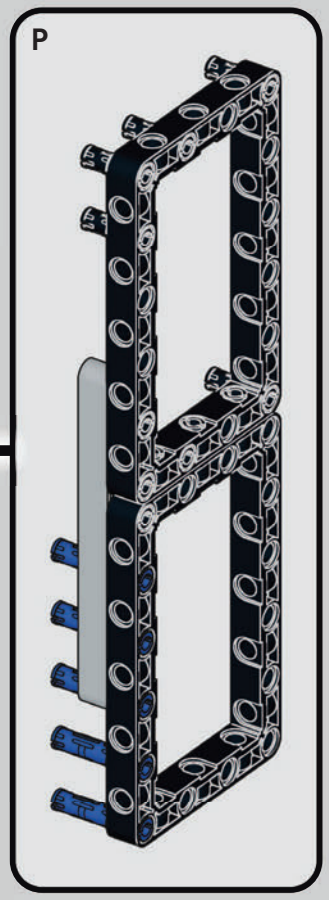

pg. 208

146

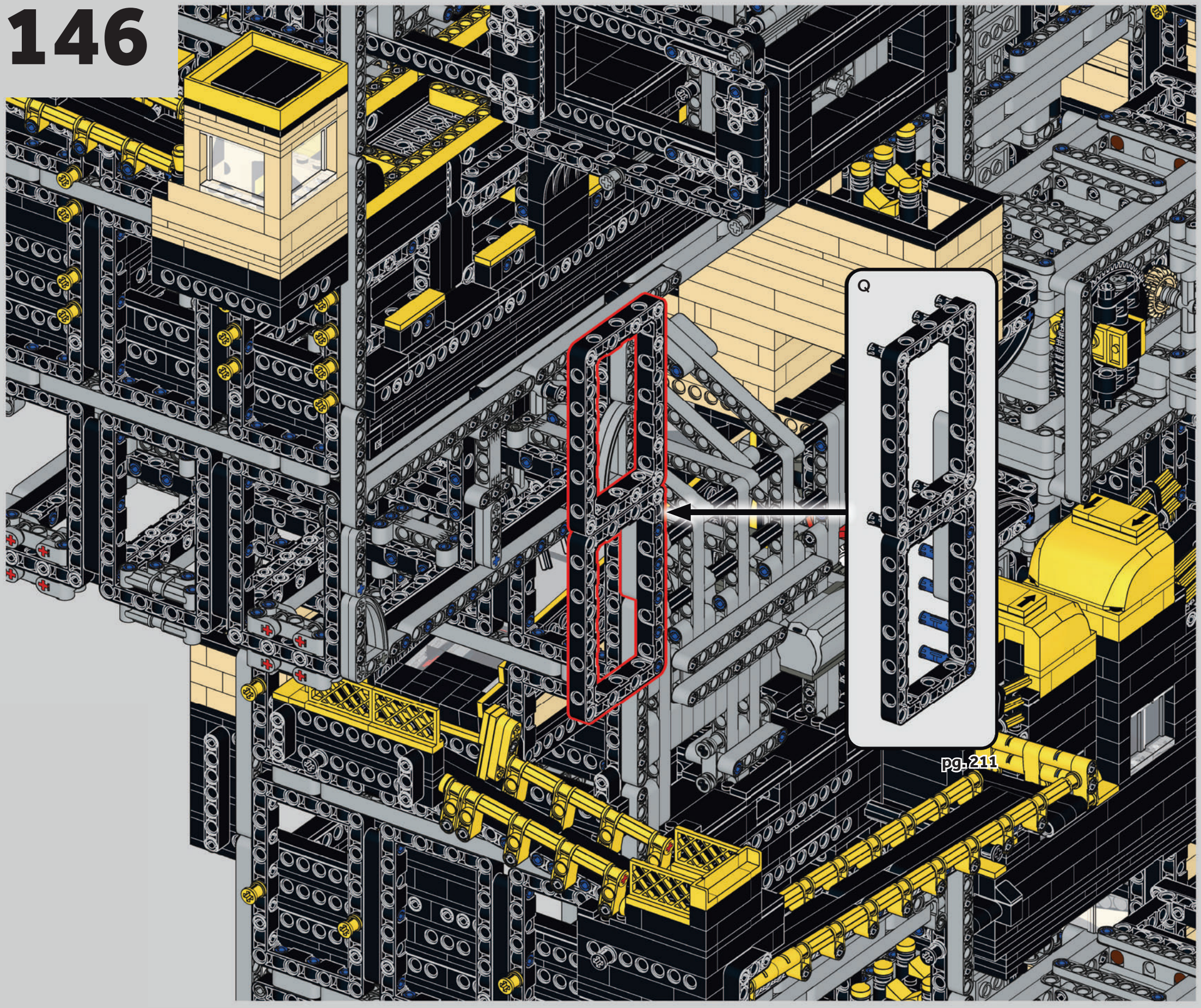

147

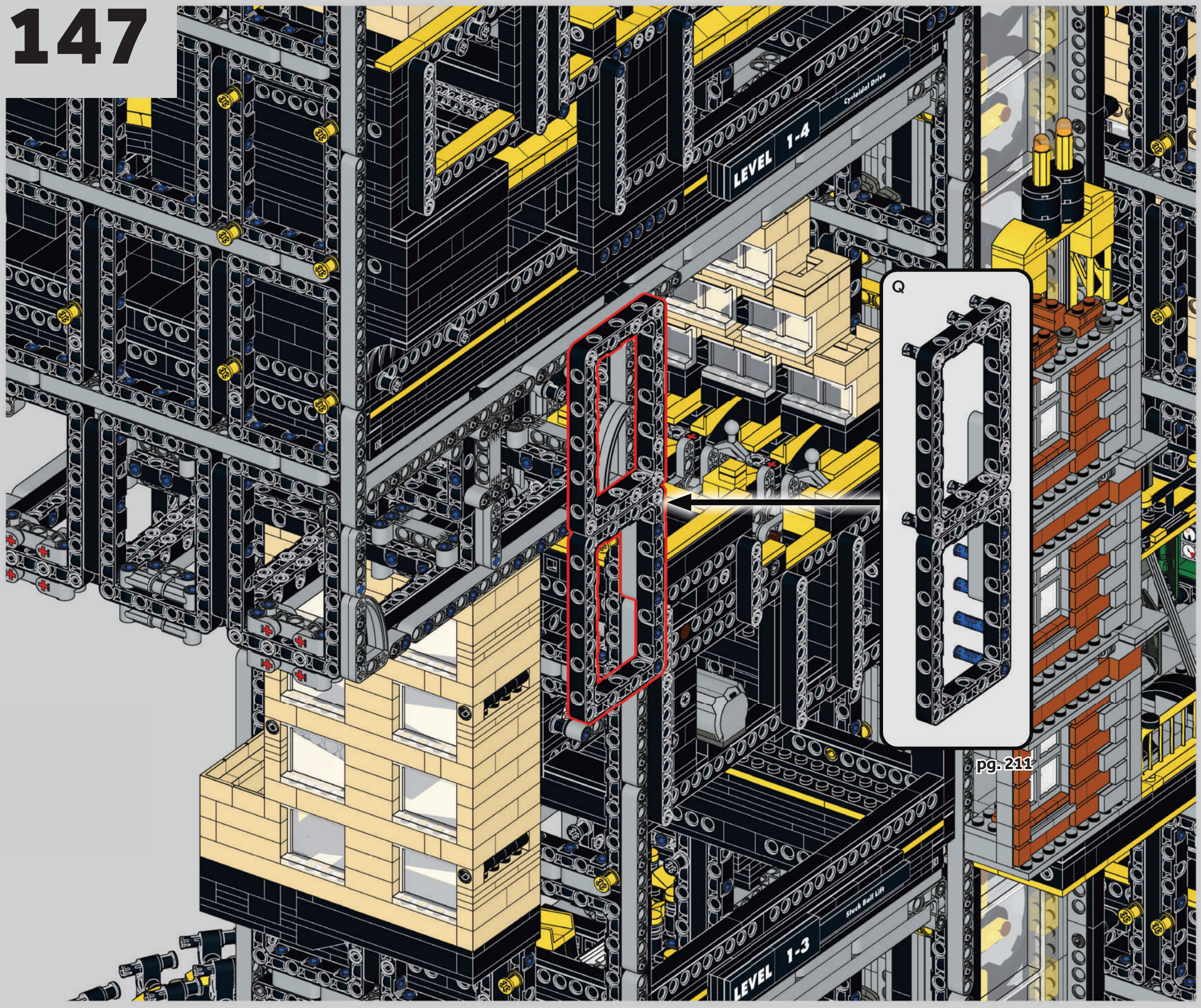

pg. 211

148

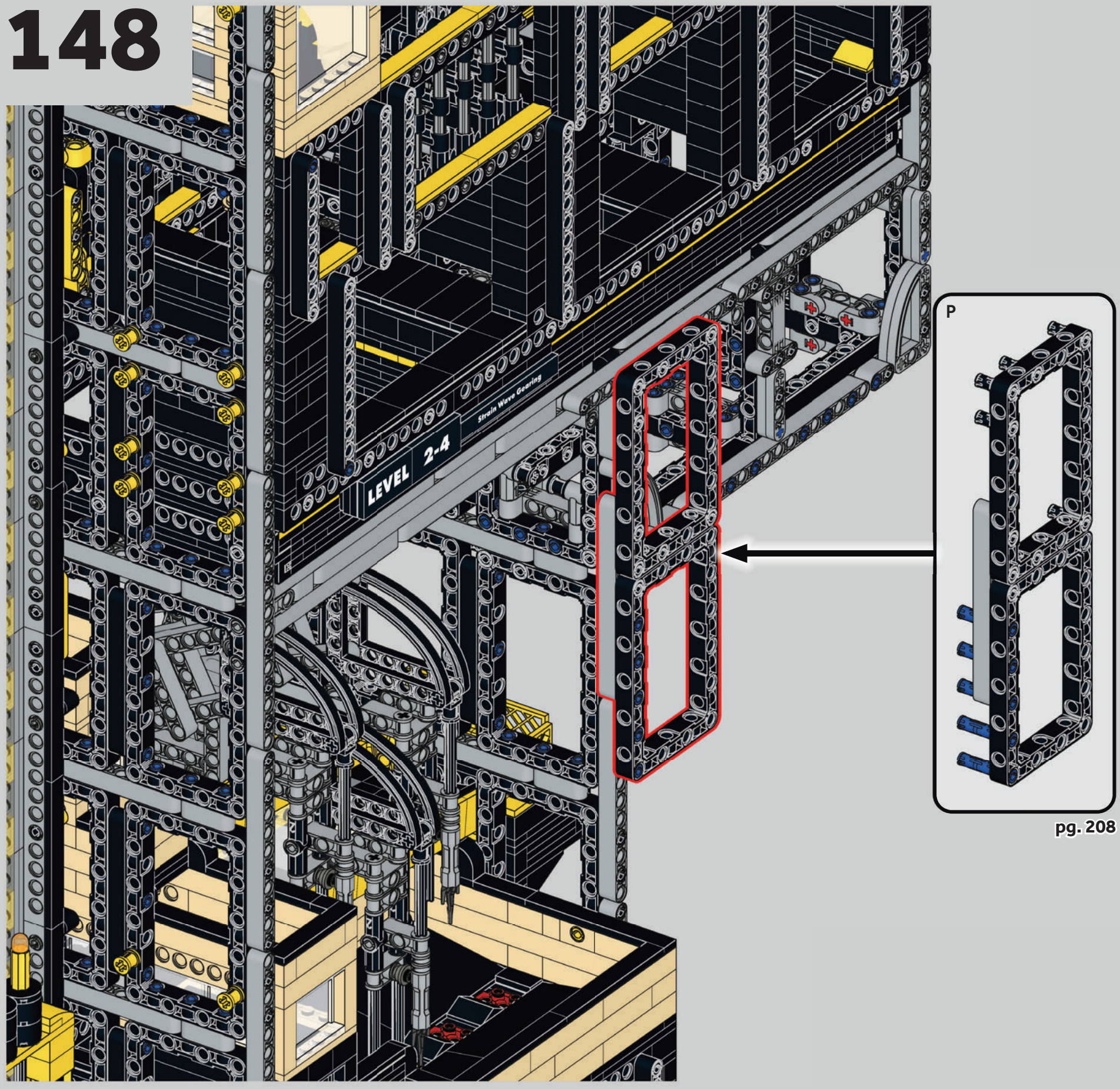

pg. 208

149

R
01

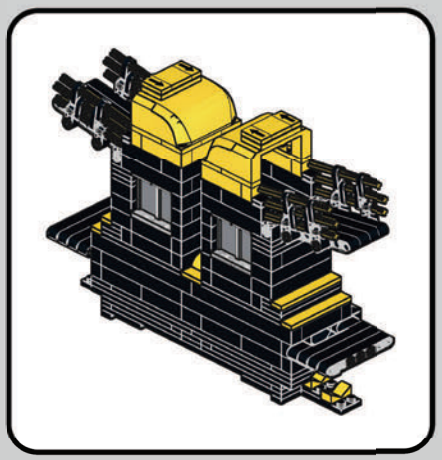

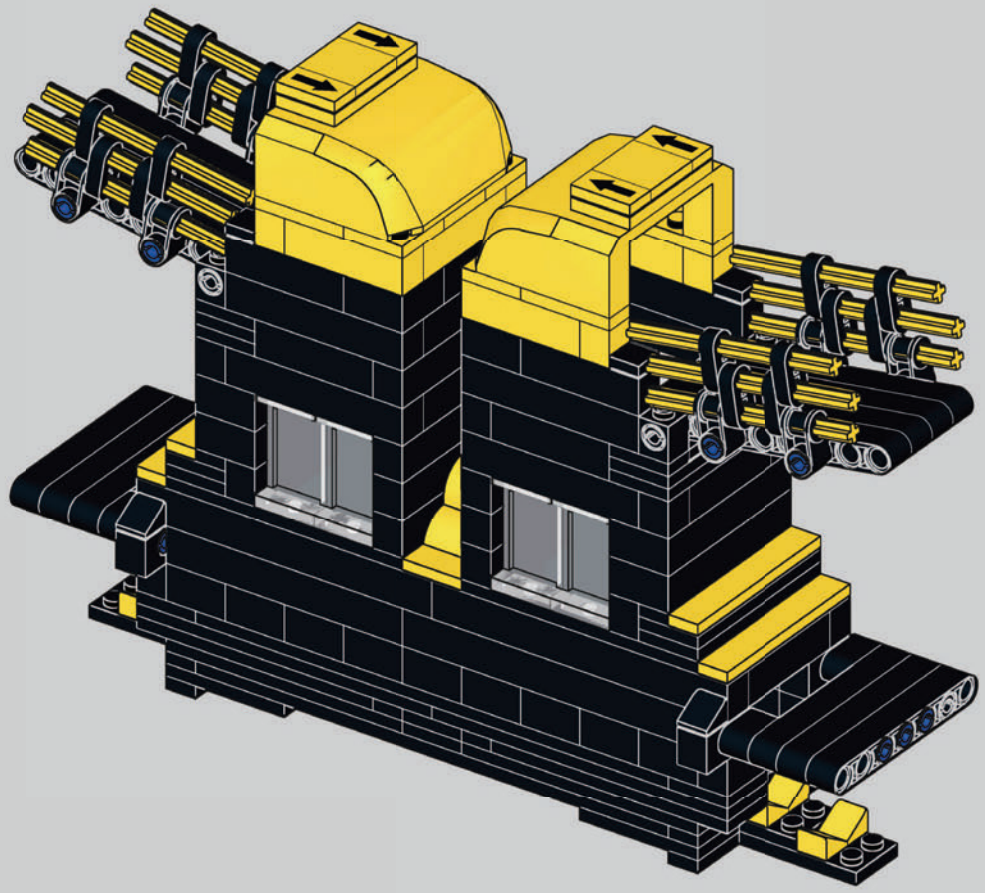

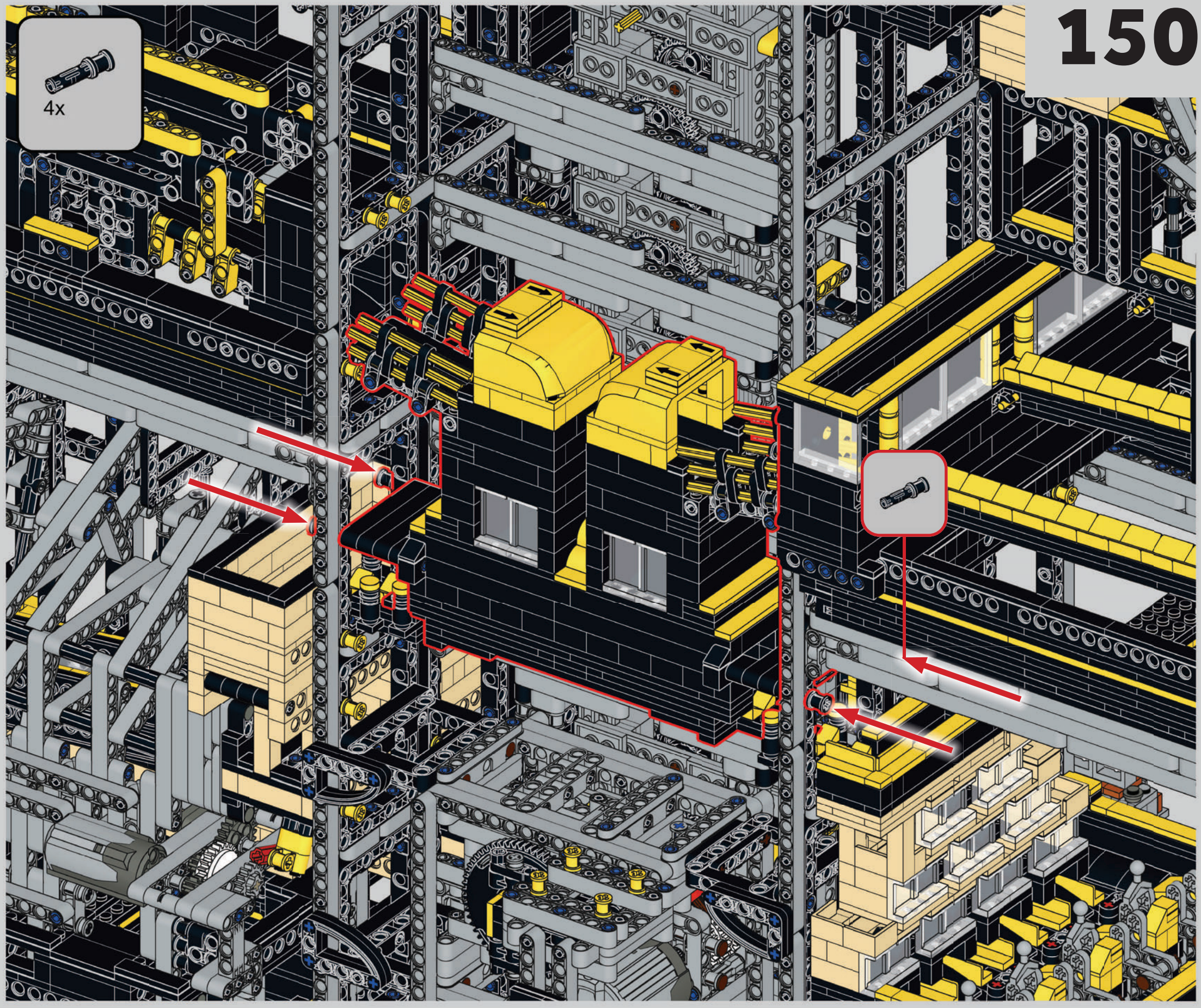
4x

151

R
02

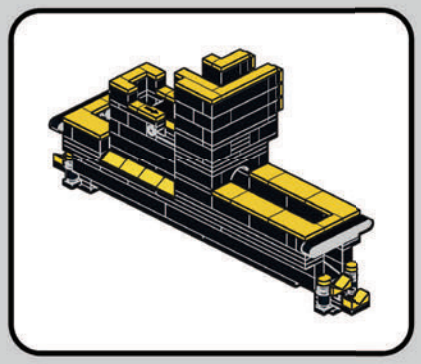

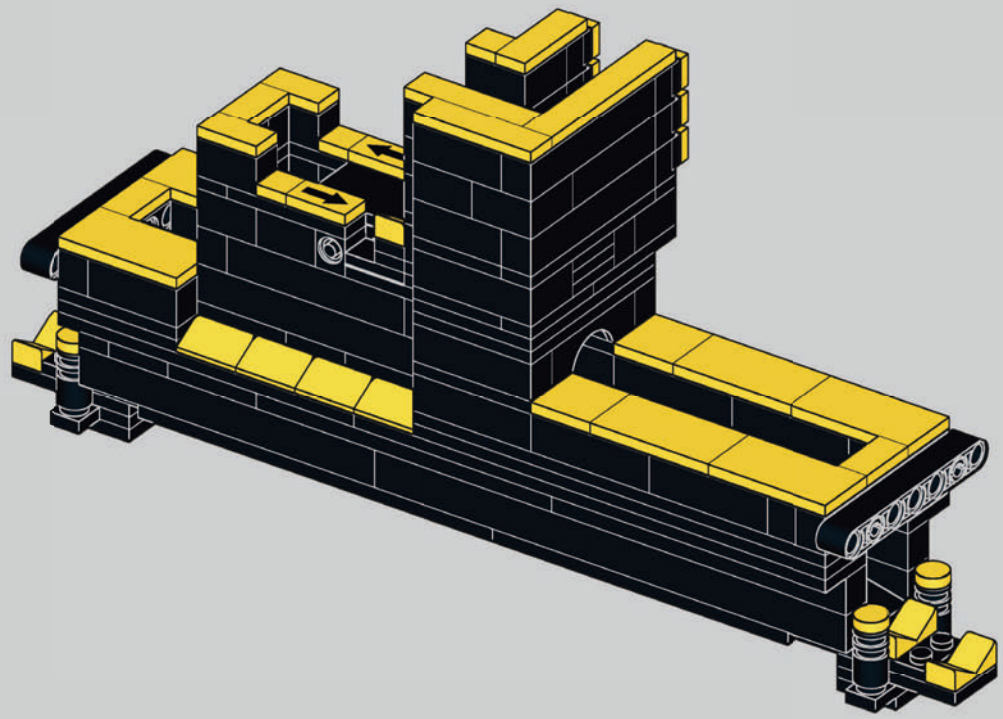

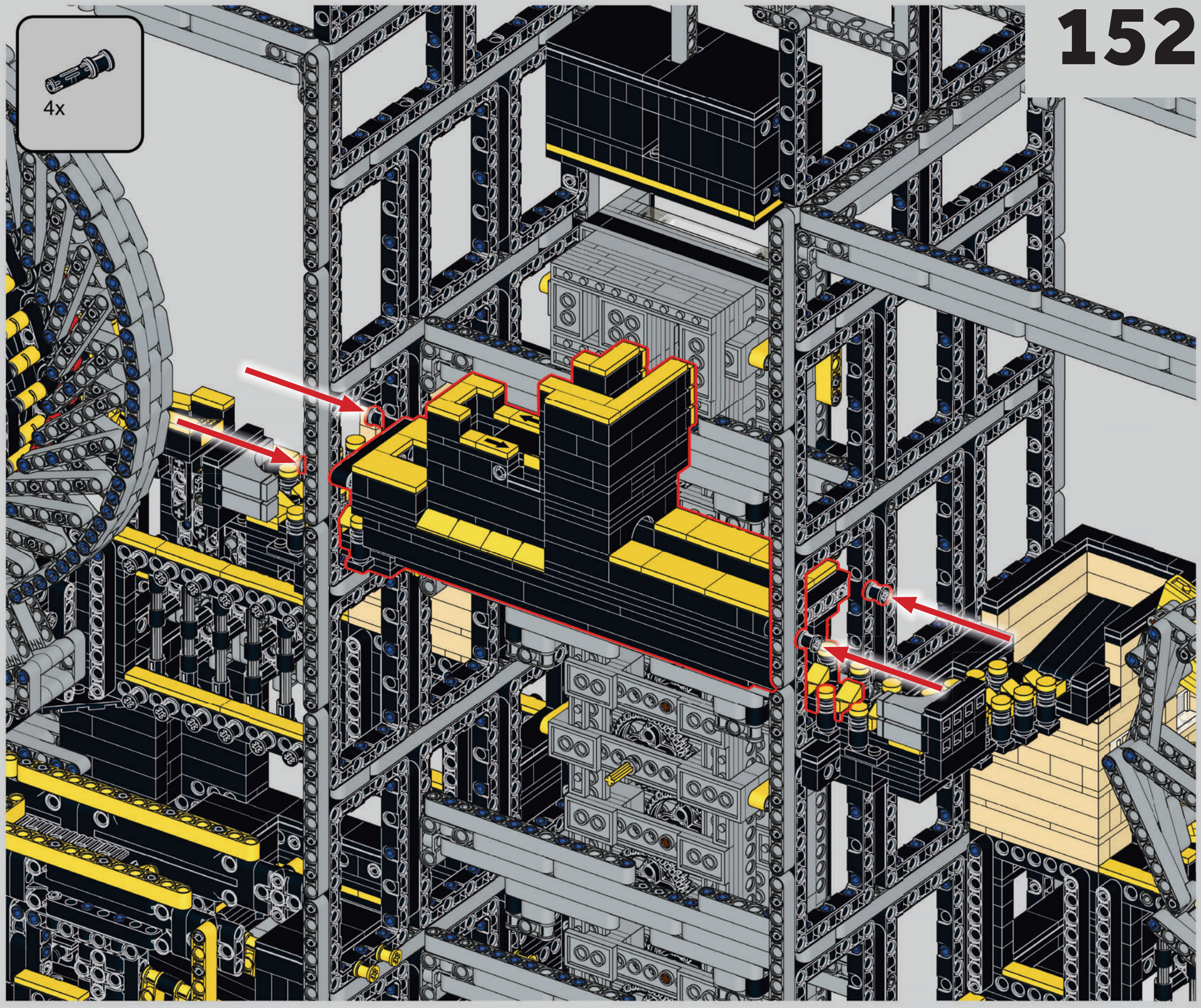
4x

153

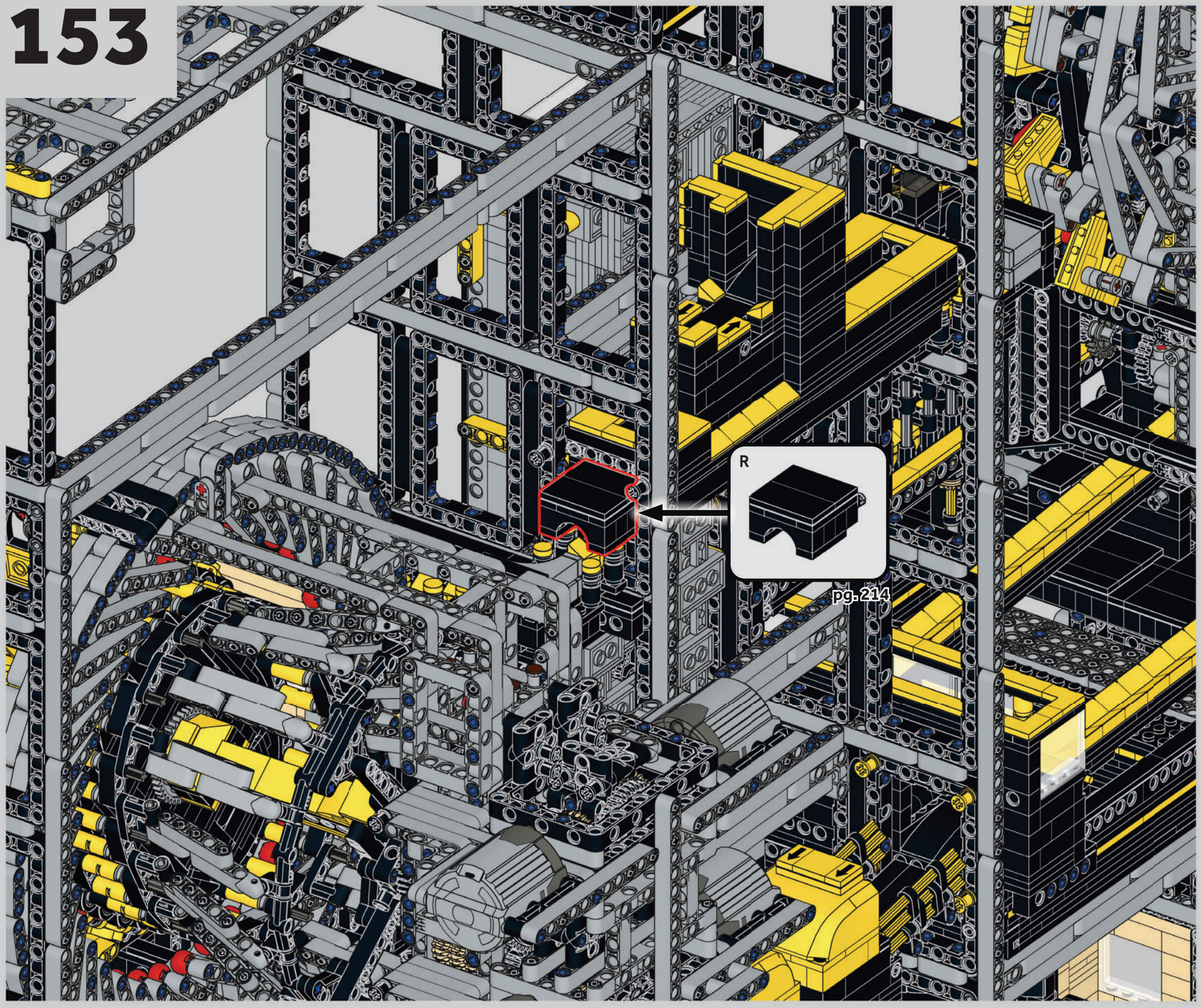

154

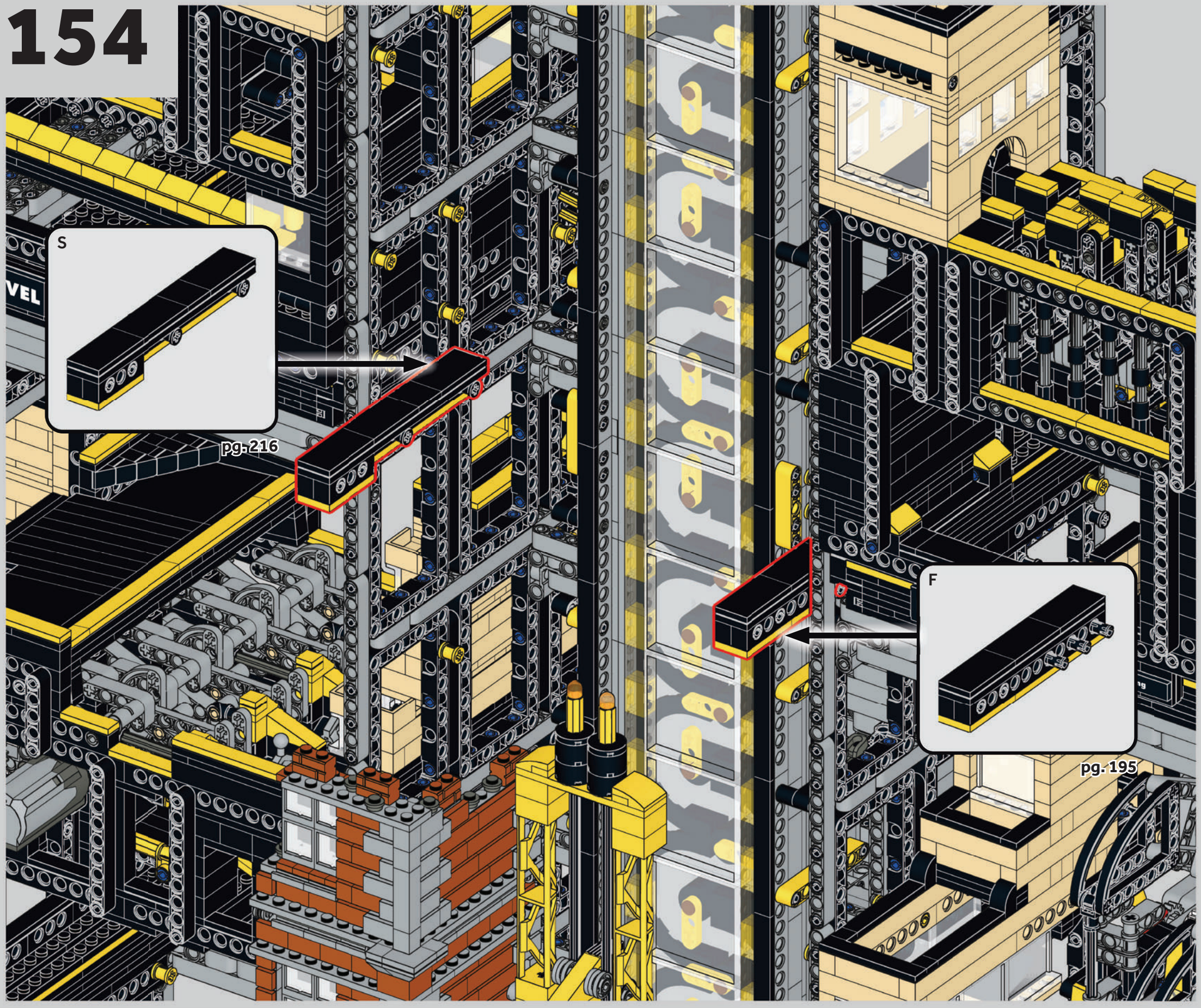

155

D
05

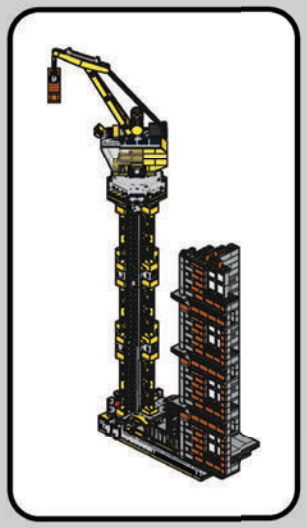

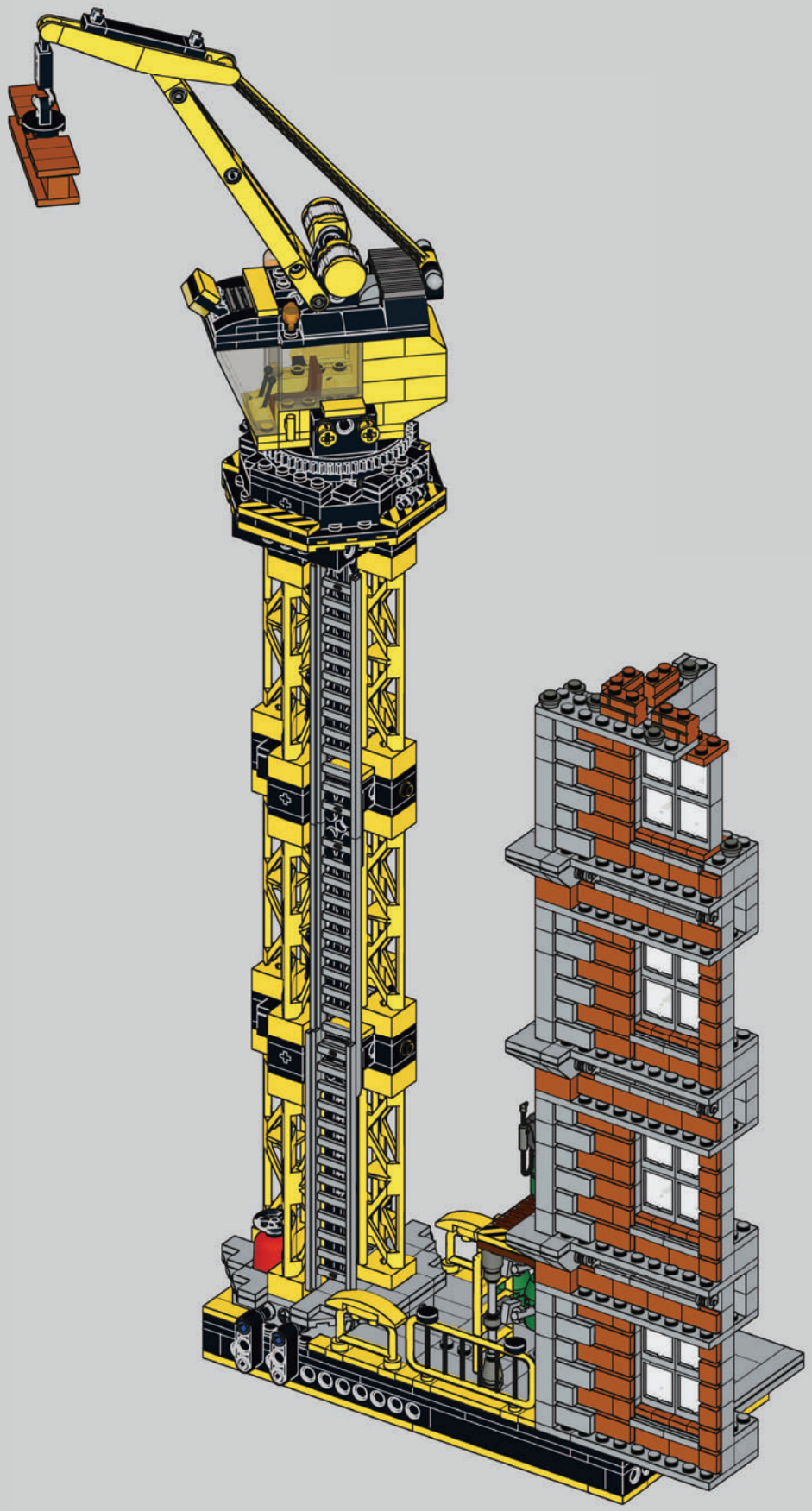

156

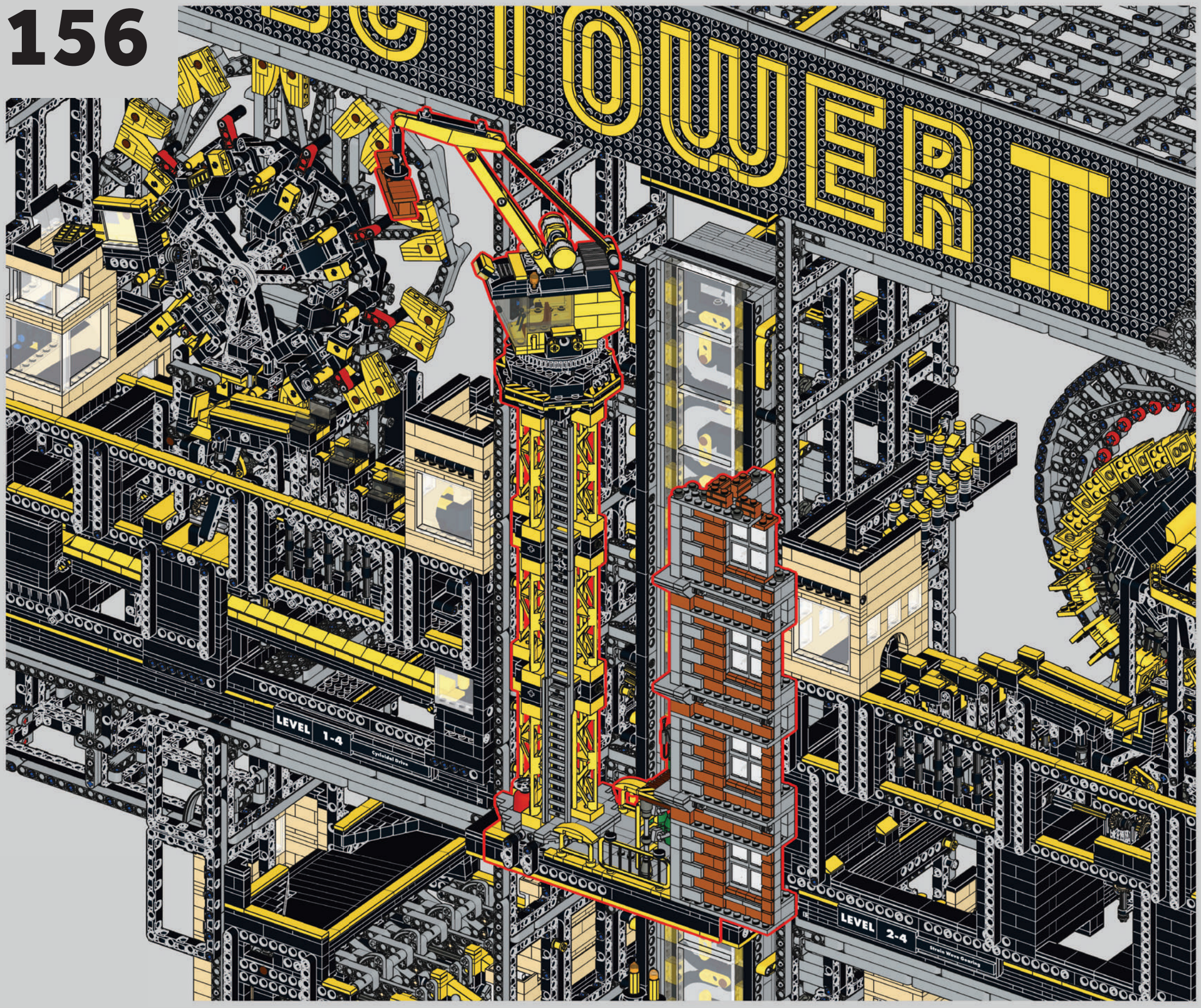

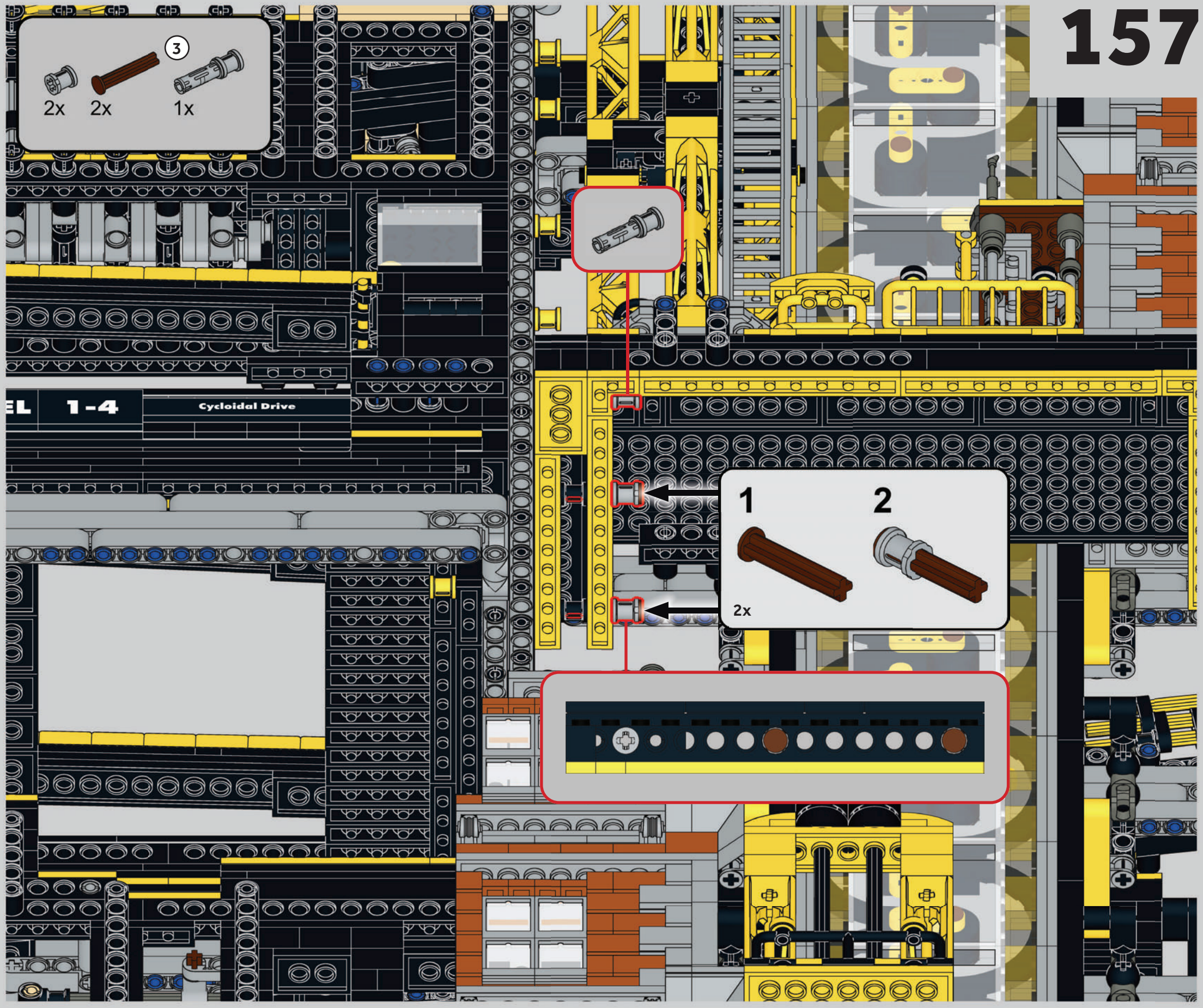
3
2x
2x
1x
EL
1-4
Cycloidal Drive
1
2
2x

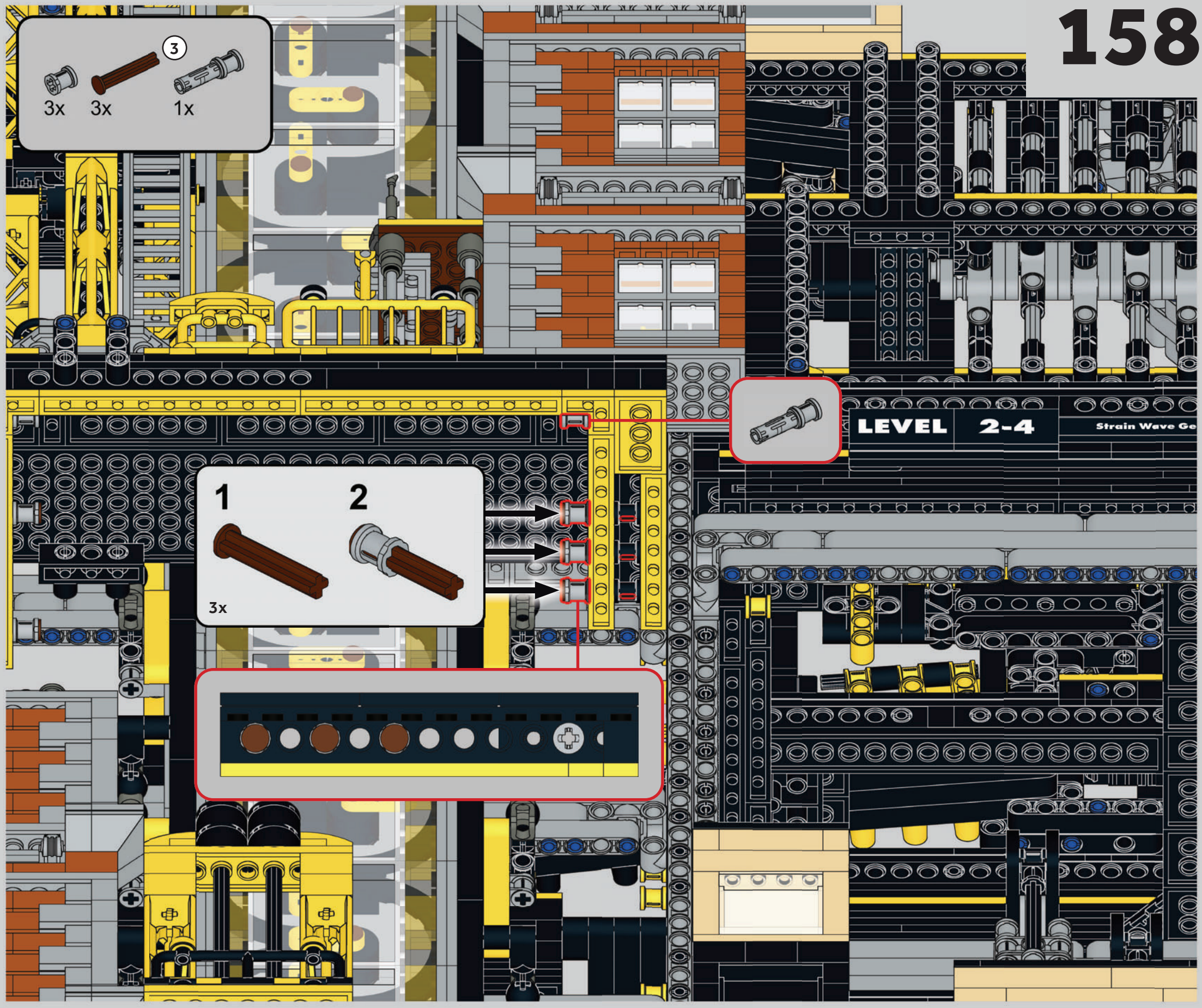
3
3x
3x
1x
LEVEL 2-4
Strain Wave Ge
1
2
3x

159

H

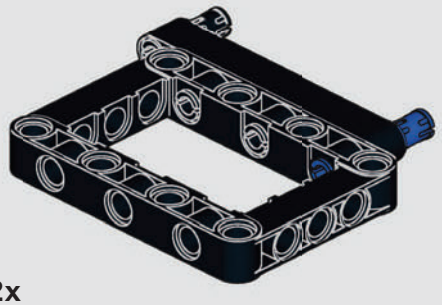

2x

pg. 199

160

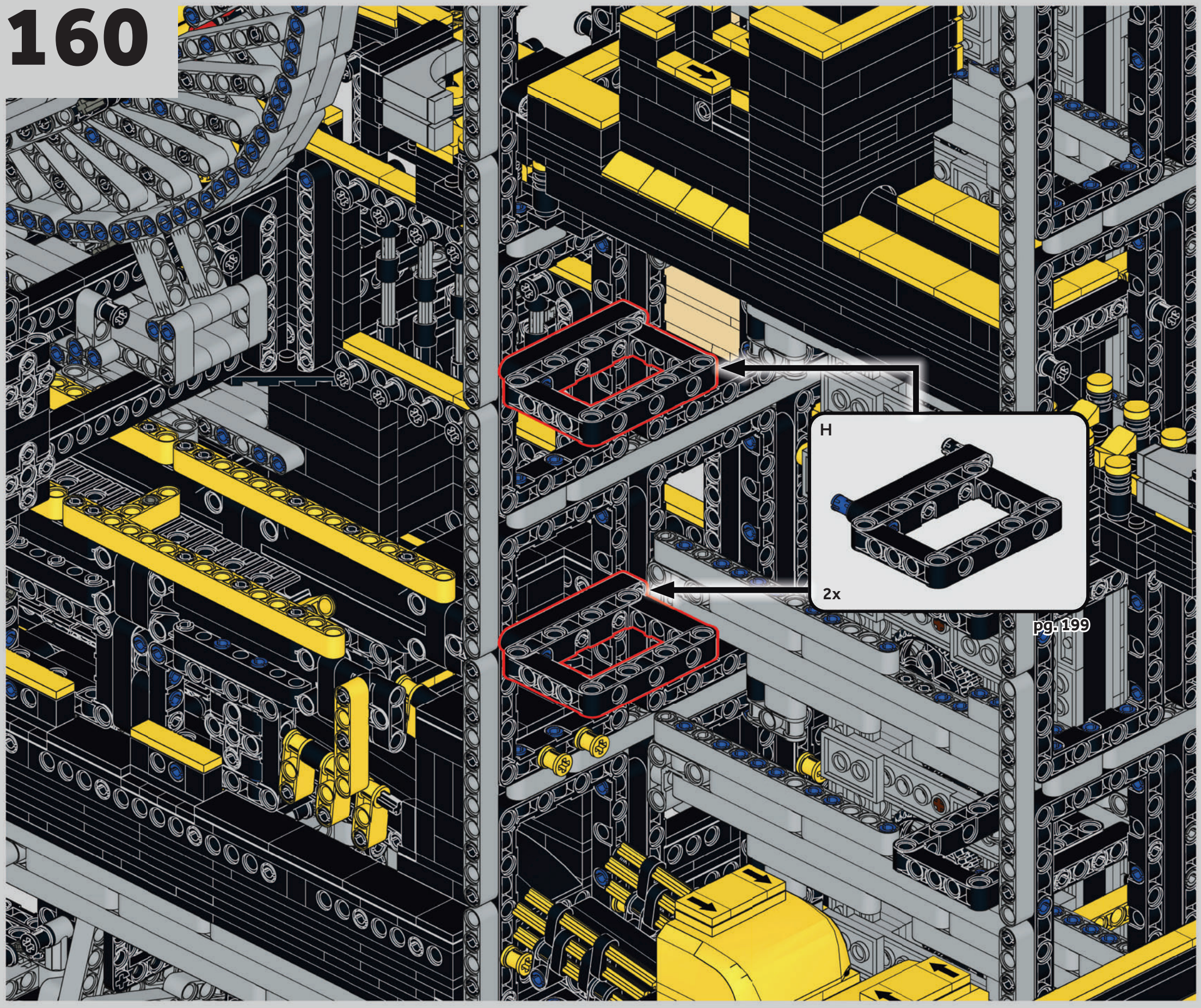

161

S
02

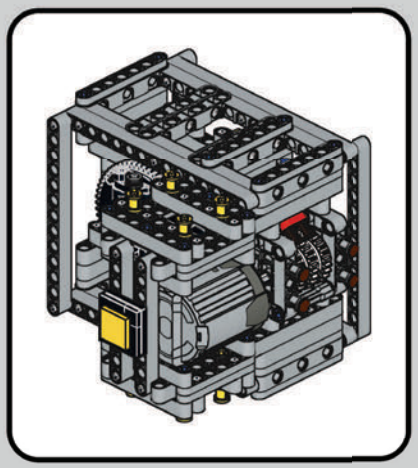

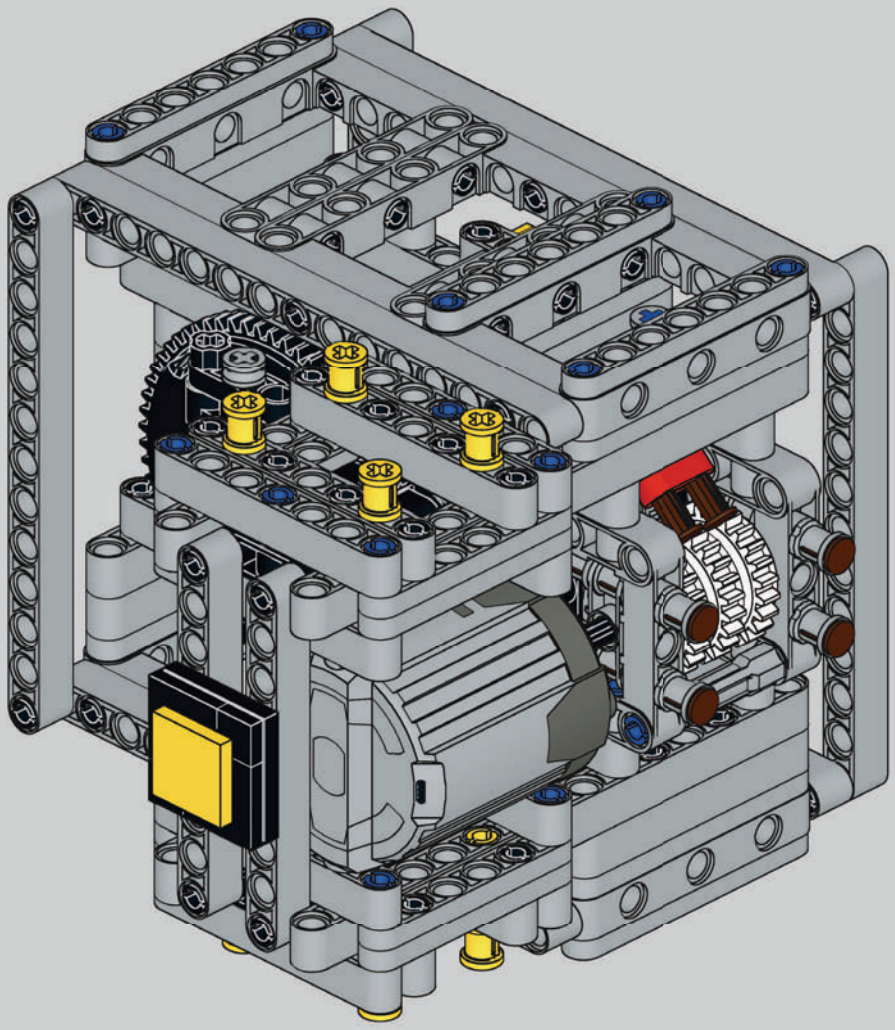

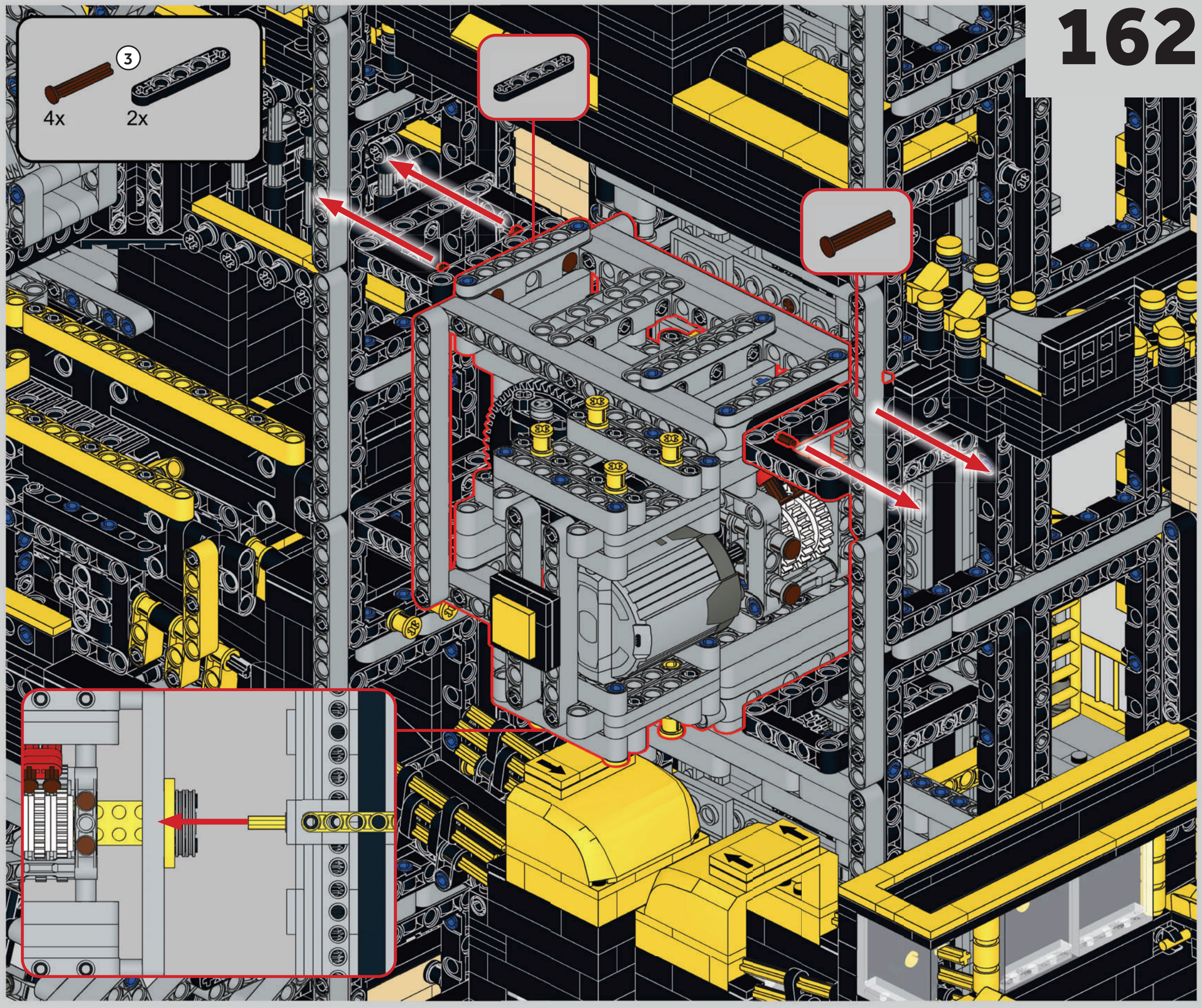
3
4x
2x

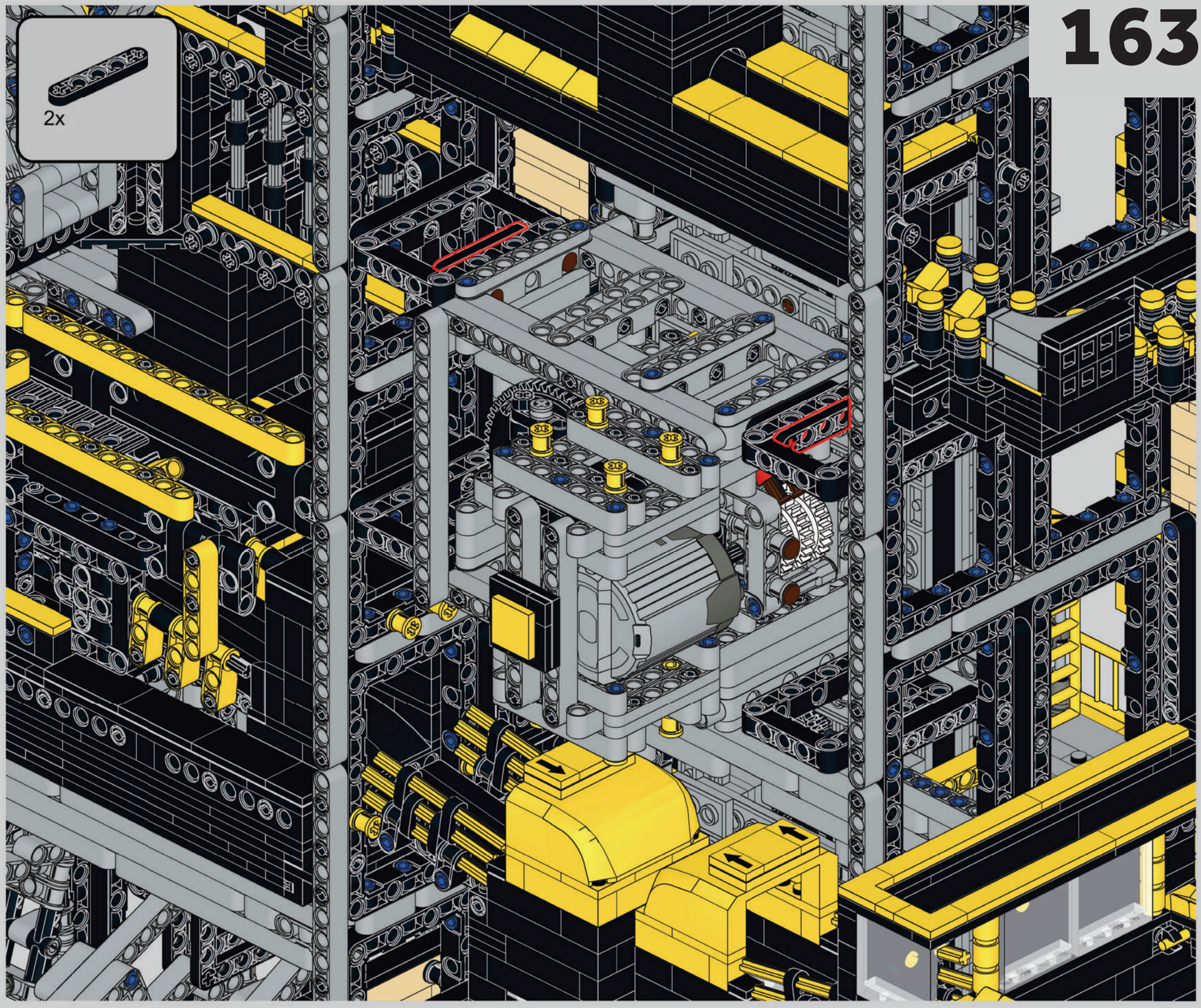
2x

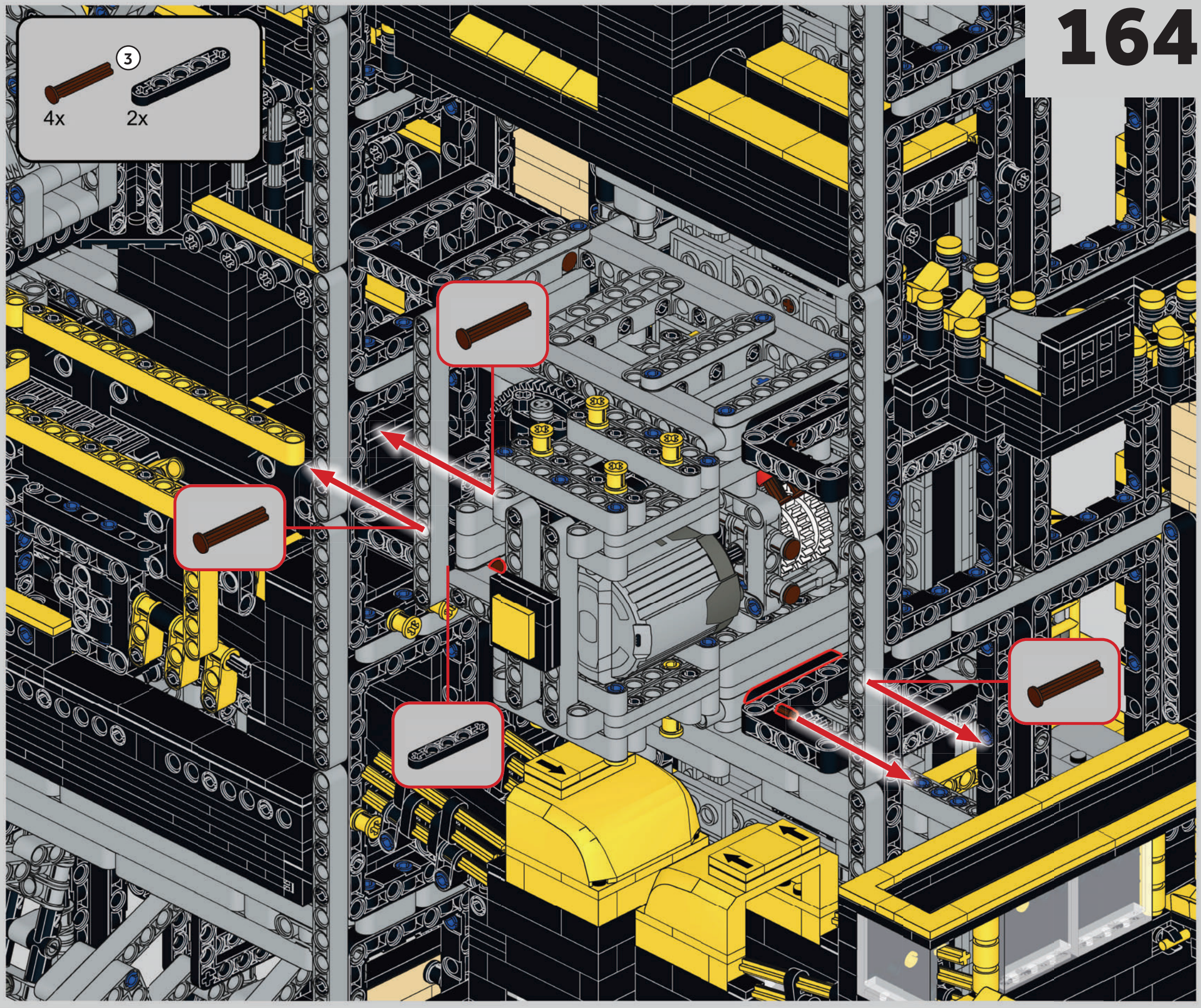
3
4x
2x

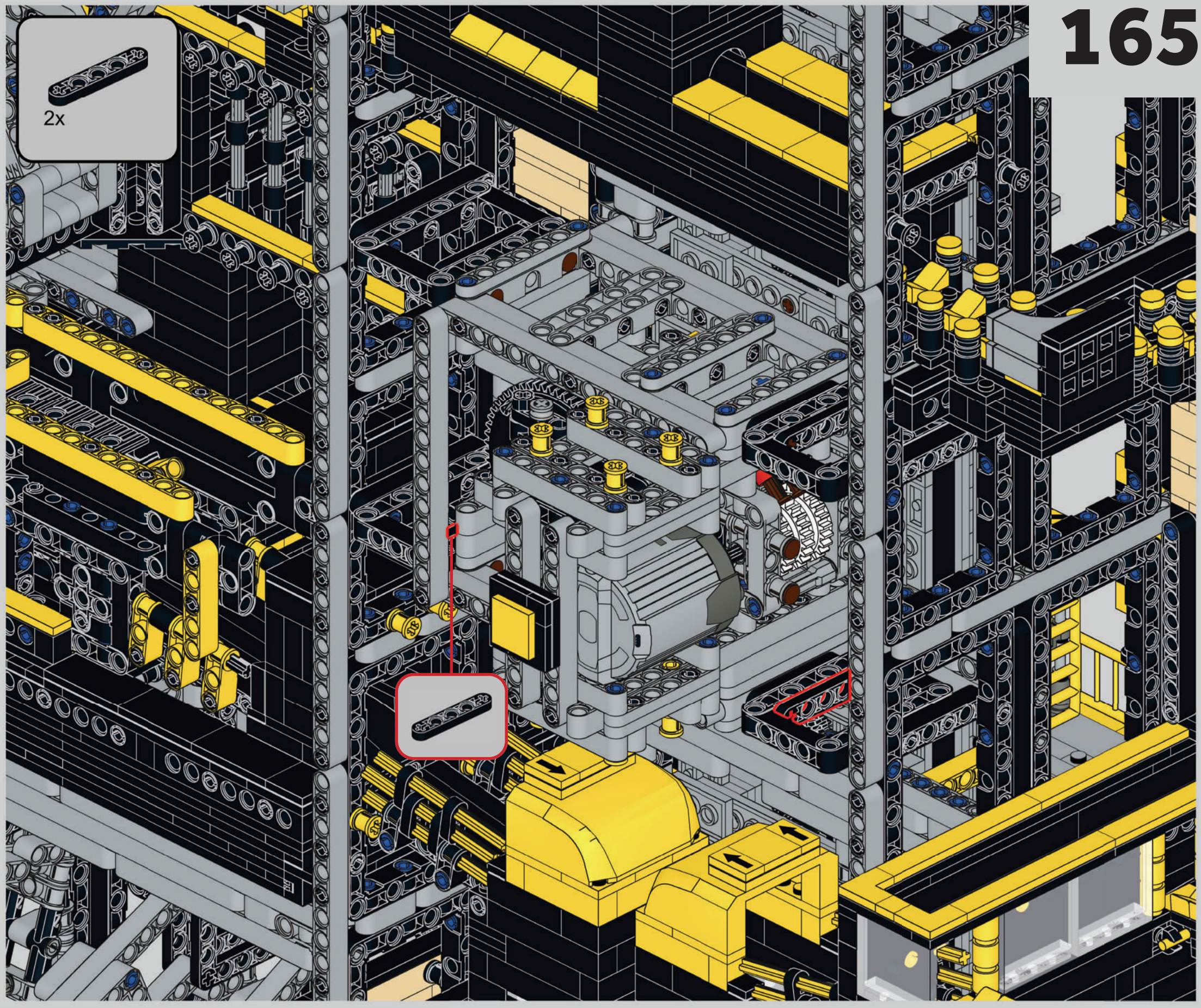
2x

166

J

2x

pg. 201

I

2x

pg. 200

167

B
01

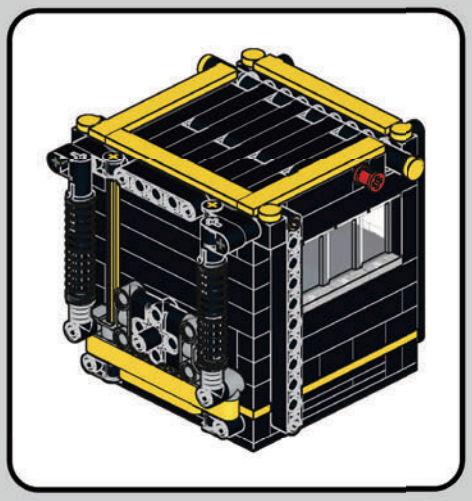

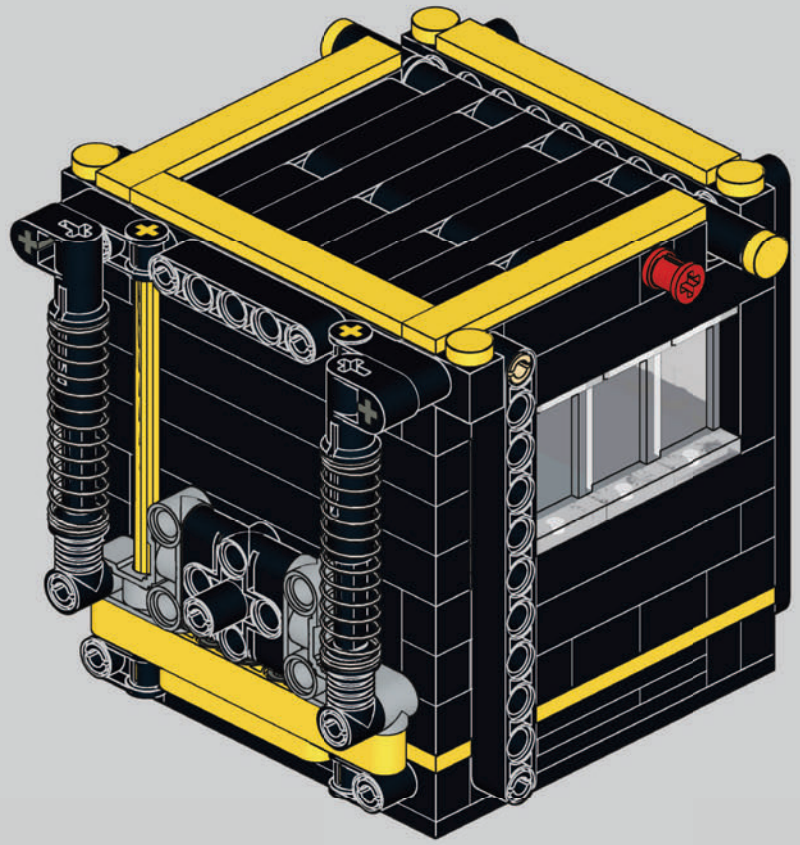

168

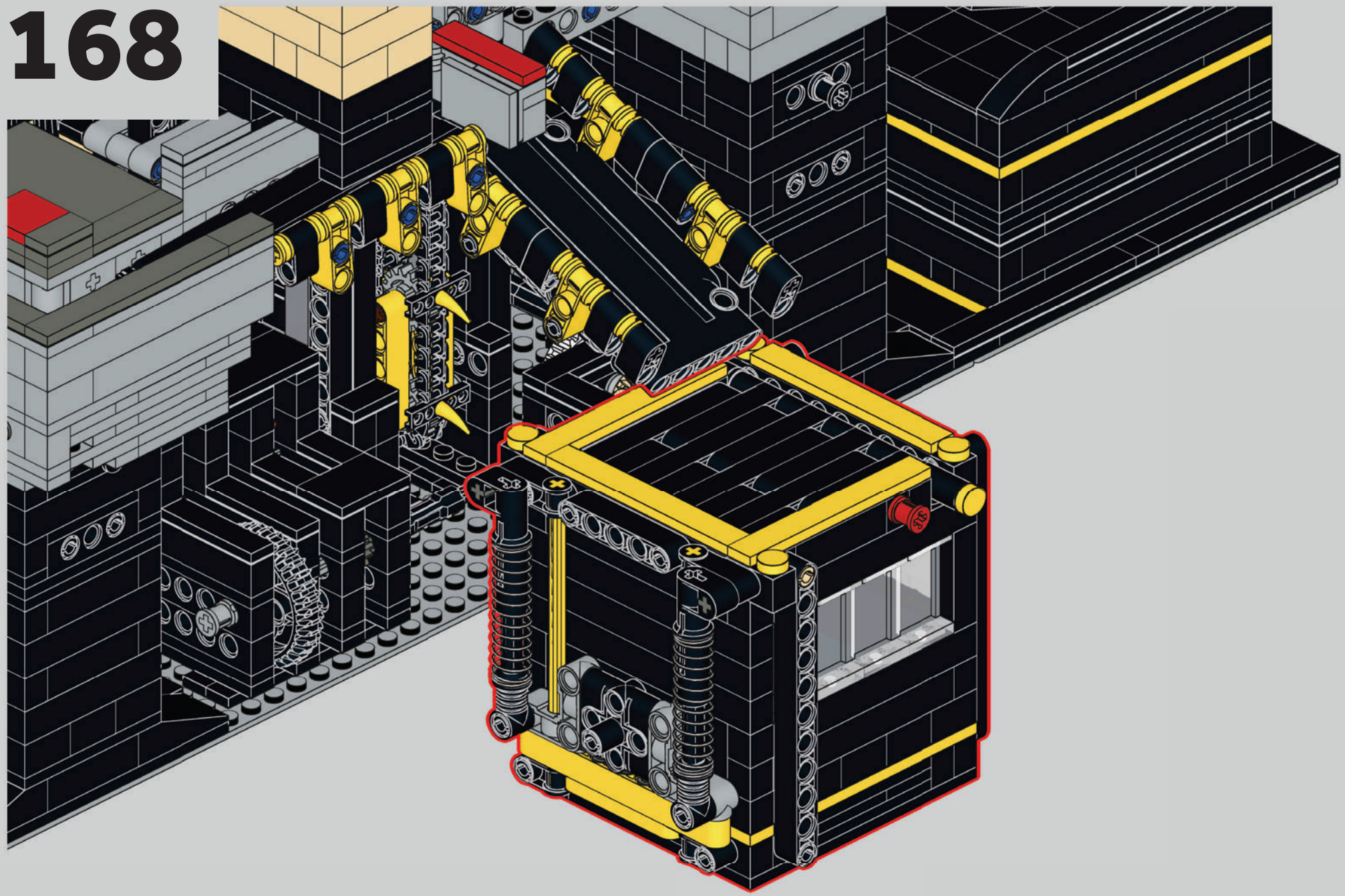

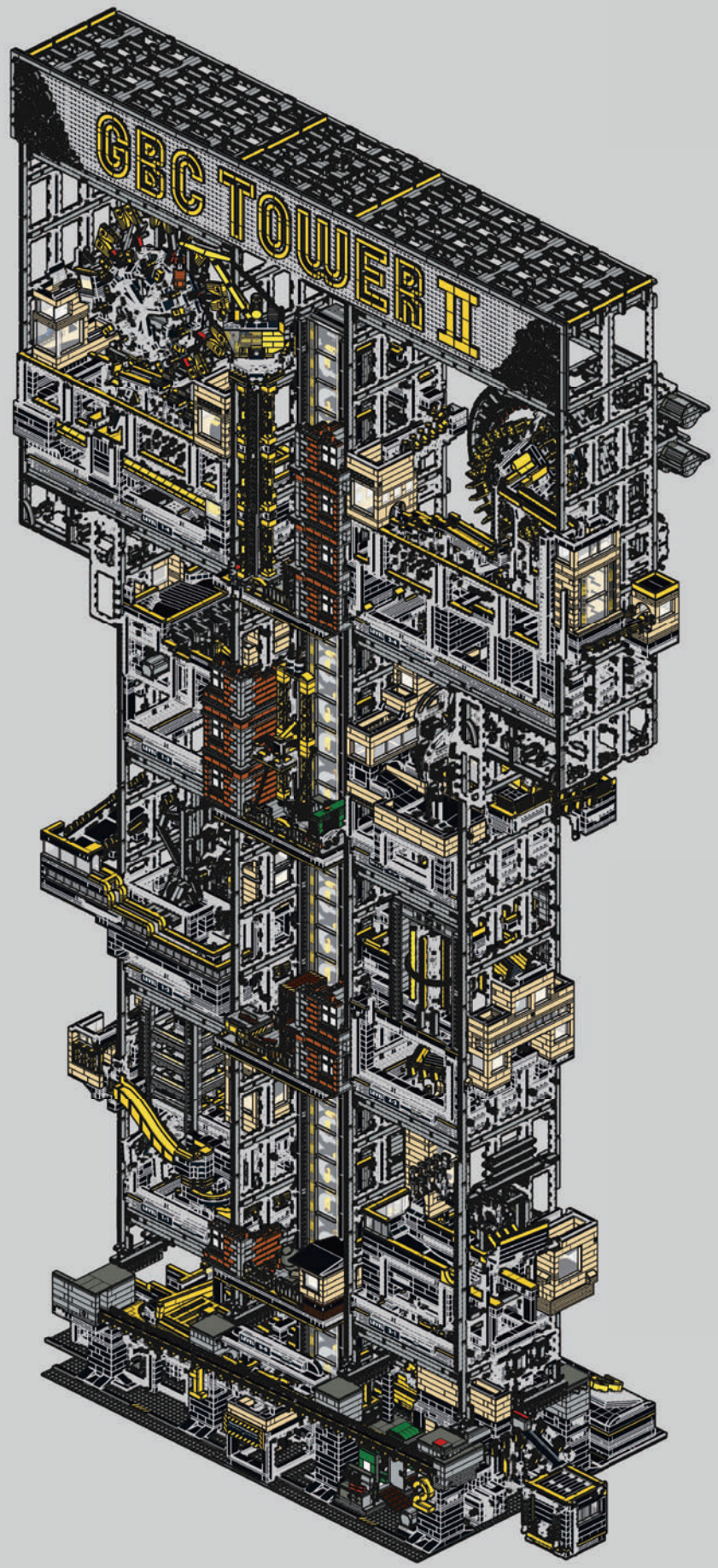
GBC TOWER II

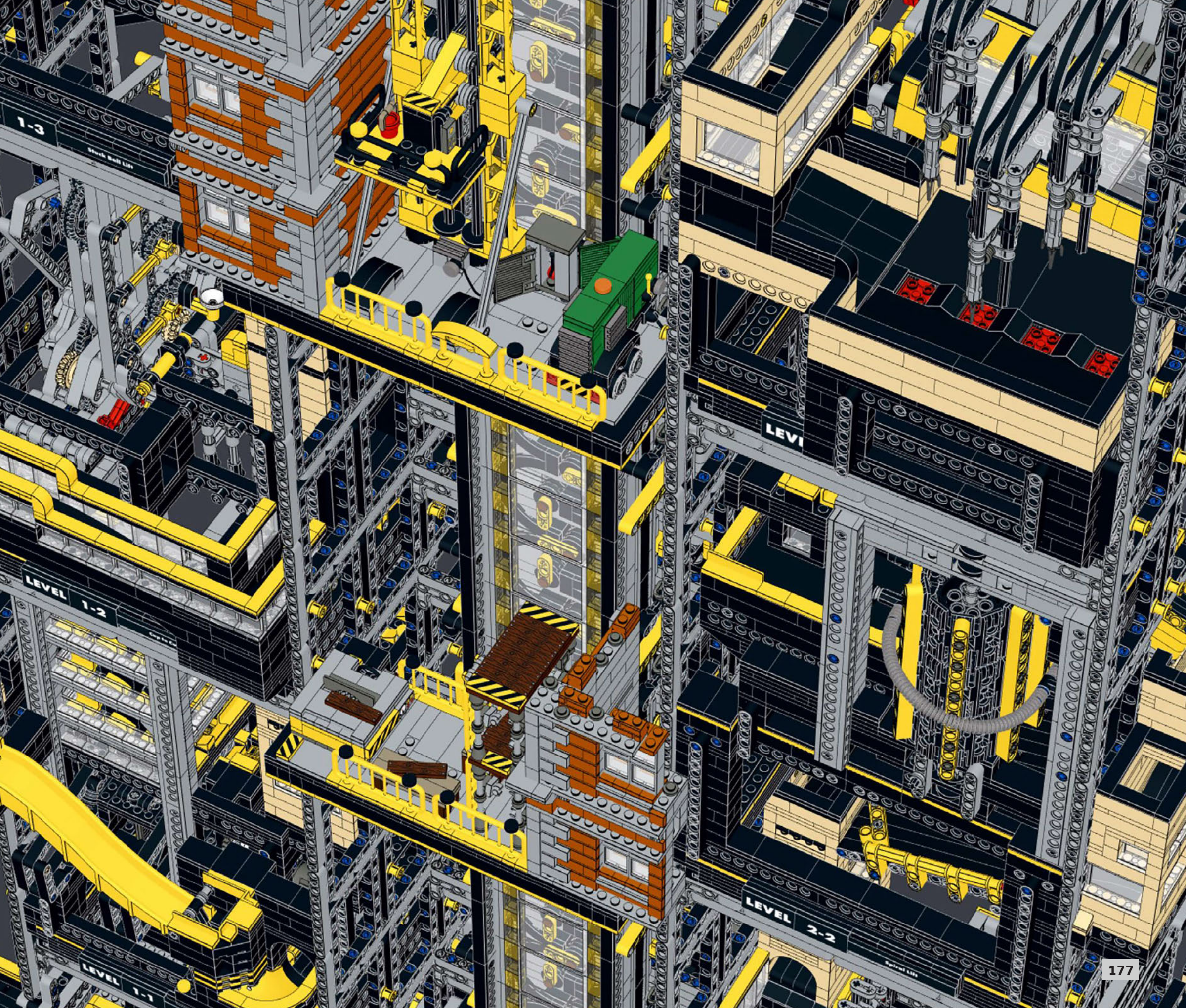
1-3
Stock Bell Lift
LEVEL 1-2
LEVEL 1-1
LEVEL 2-2
Spiral Lift

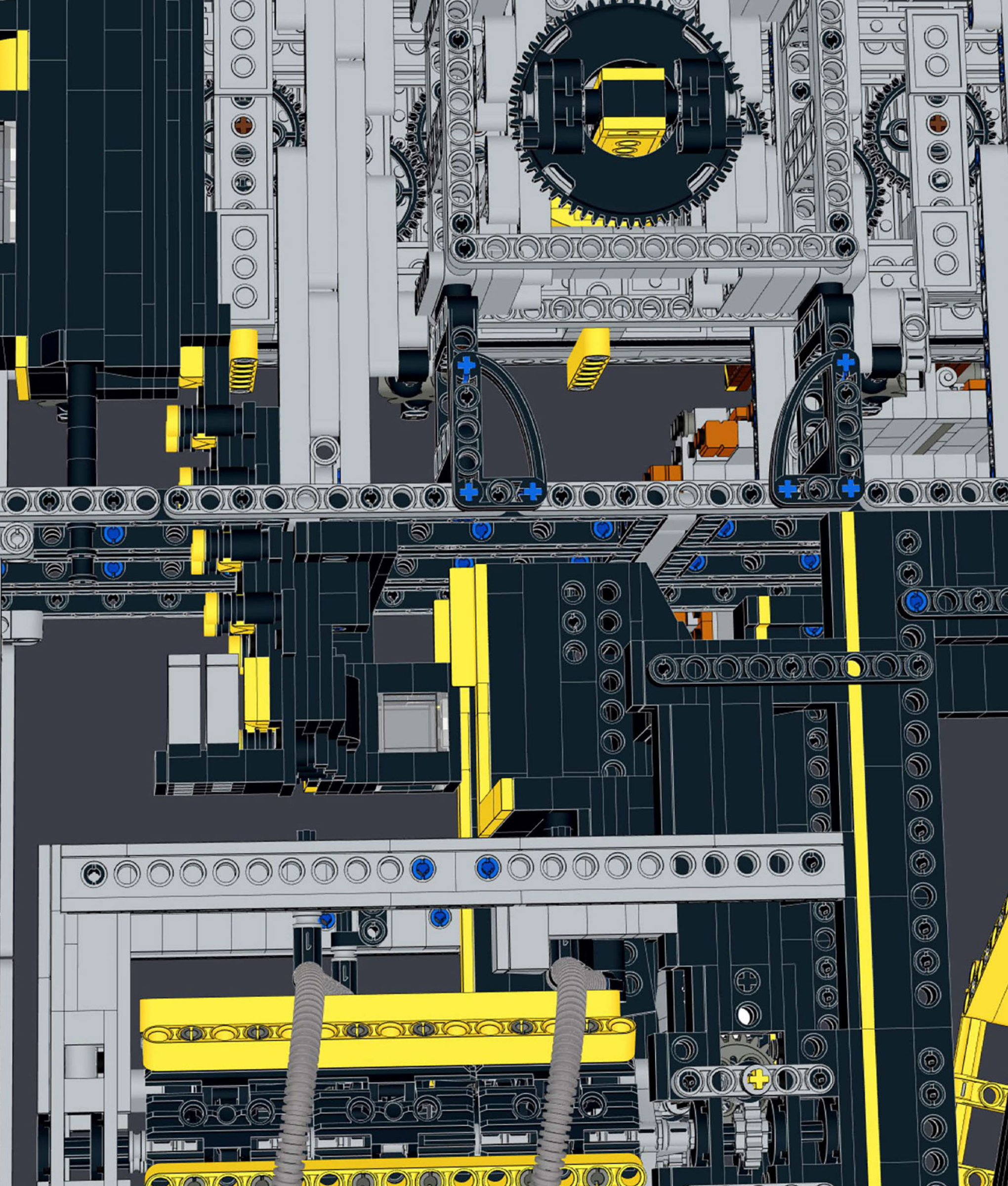

COMPONENTS

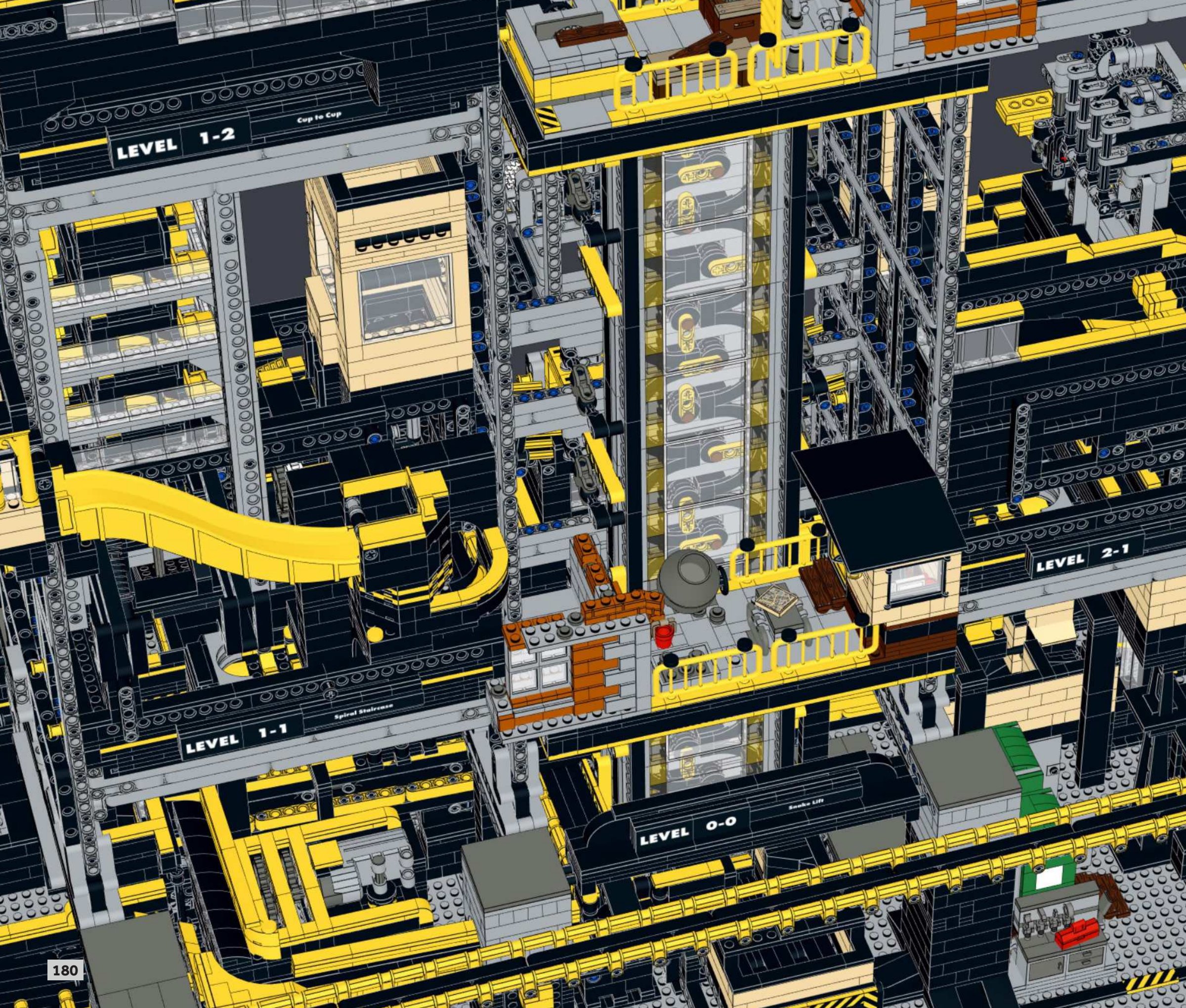
LEVEL 1-2
Cup to Cup
LEVEL 1-1
Spiral Staircase
LEVEL 0-0
Snake Lift
LEVEL 2-1

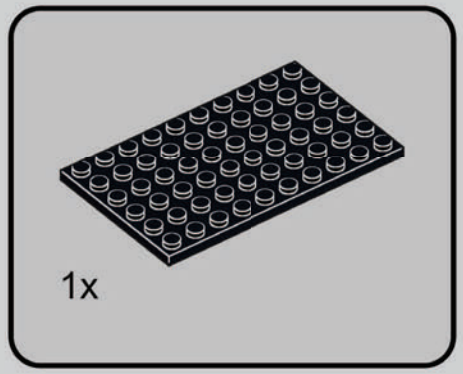

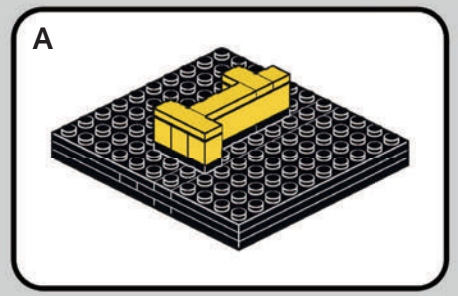

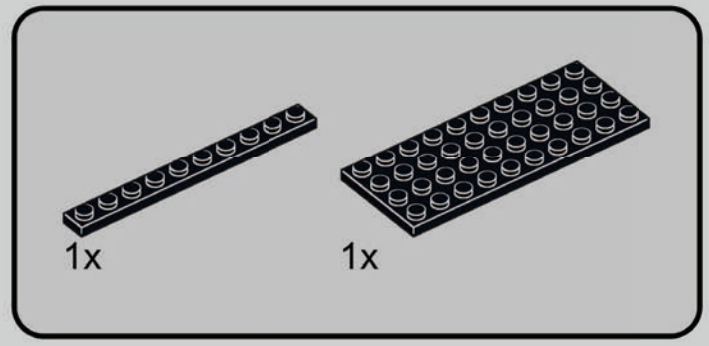

1

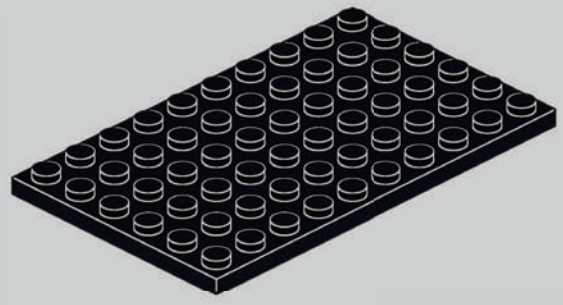

2

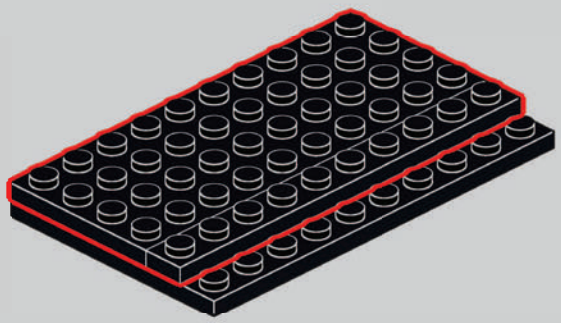

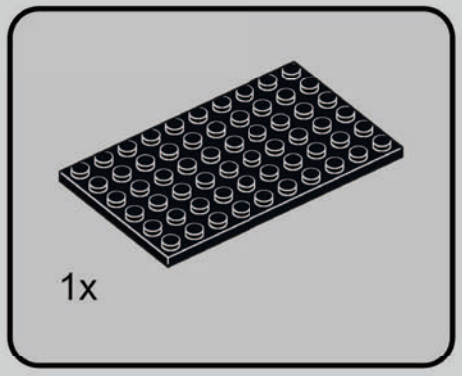

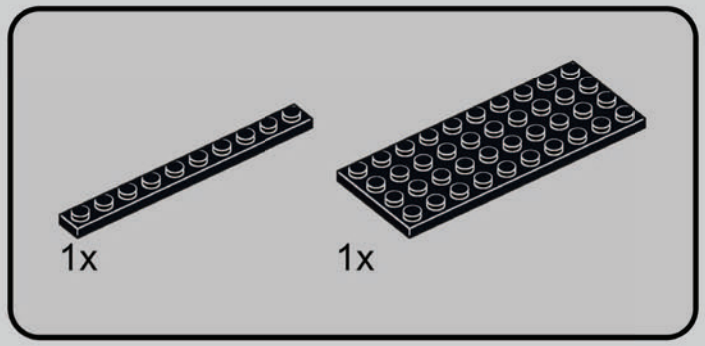

3

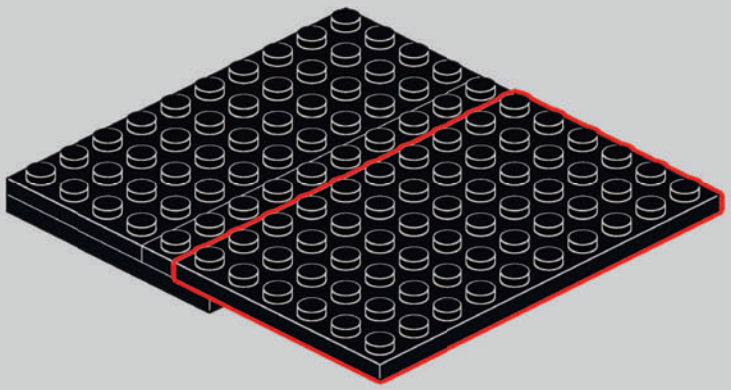

4

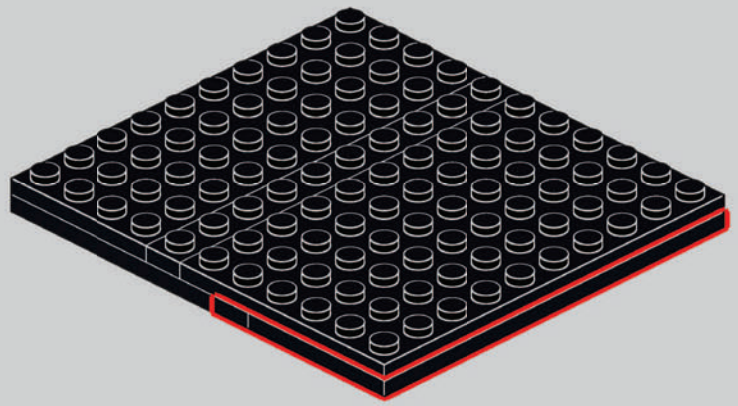

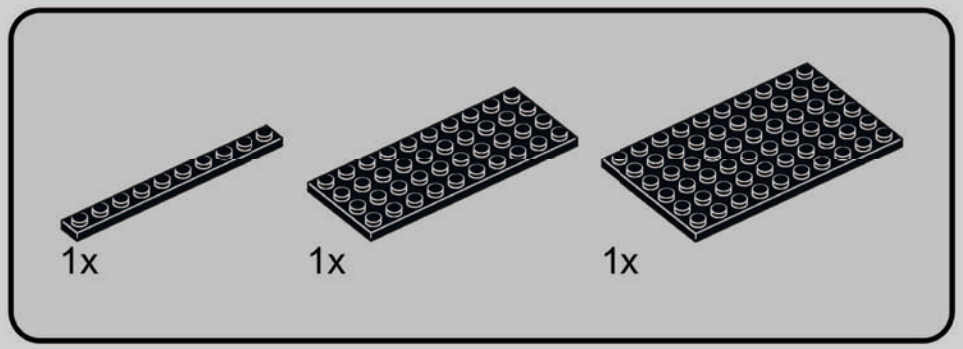

5

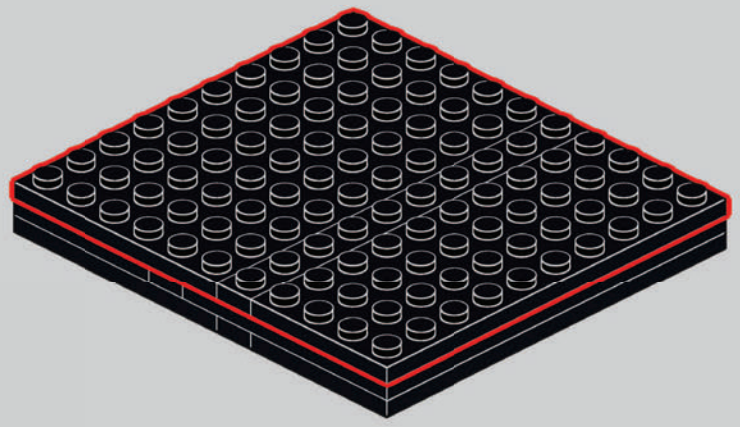

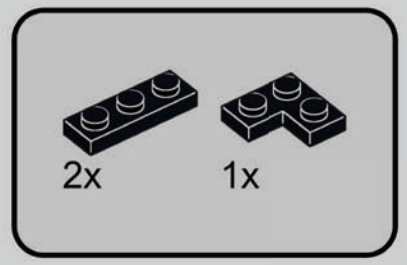

6

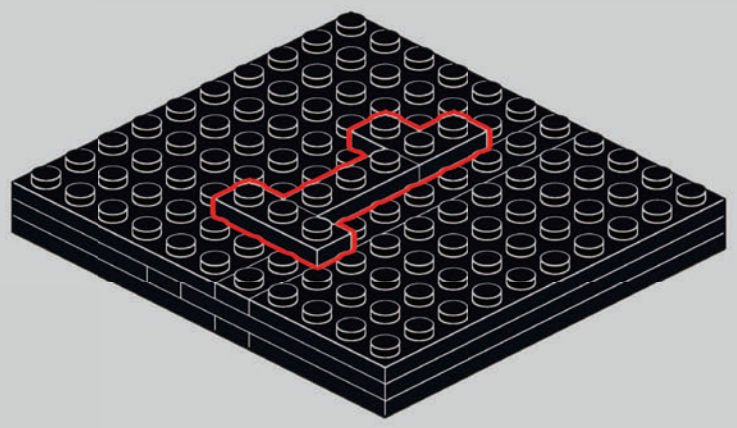

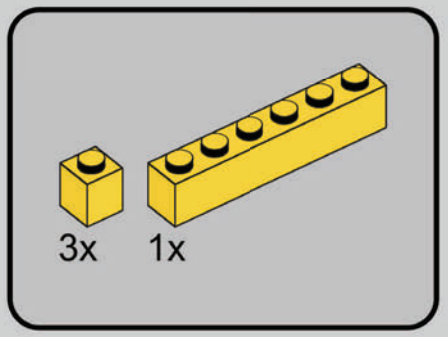

7

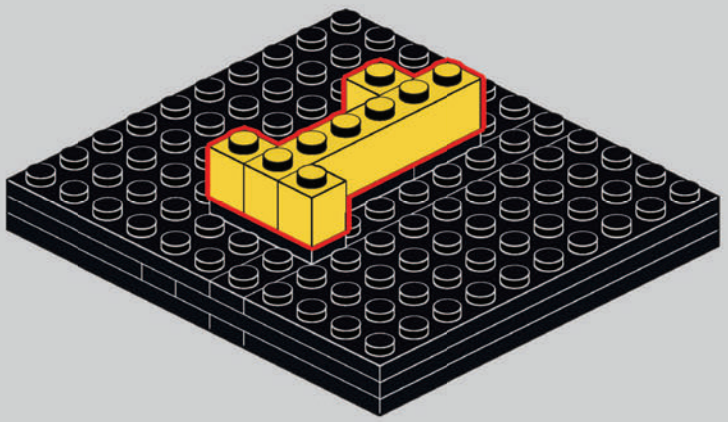

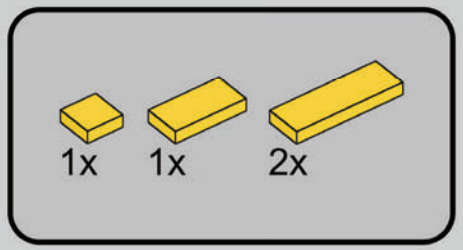

8

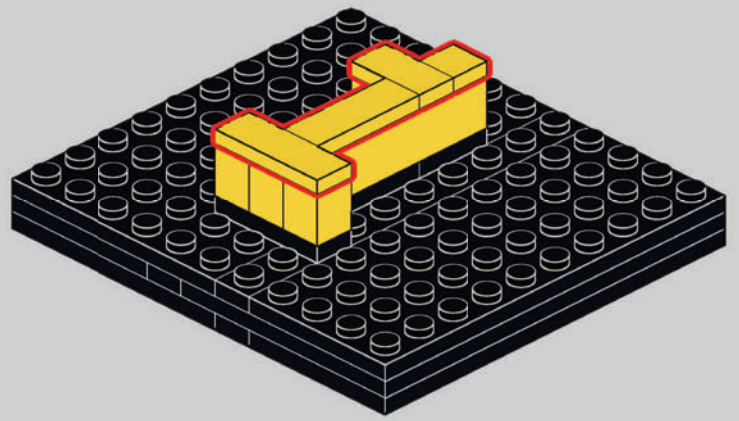

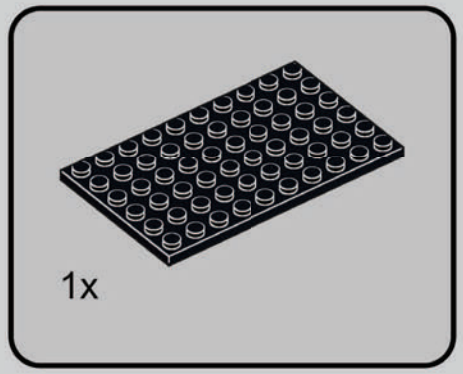

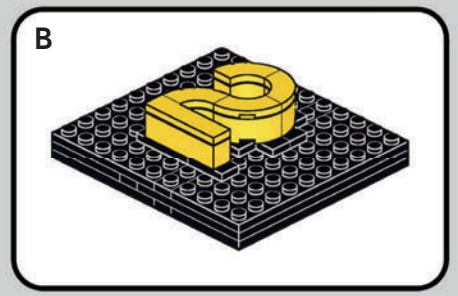

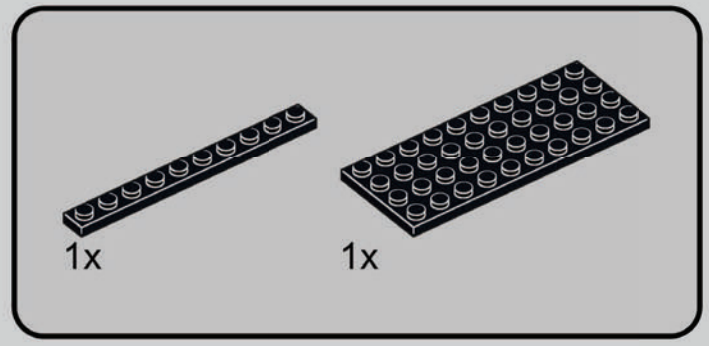

1

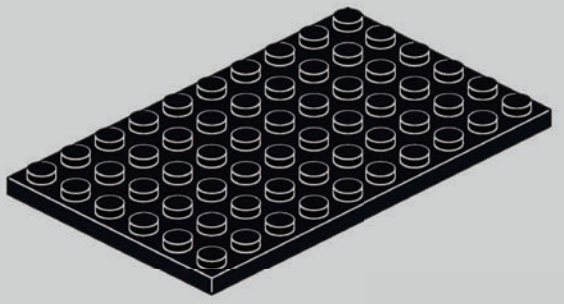

2

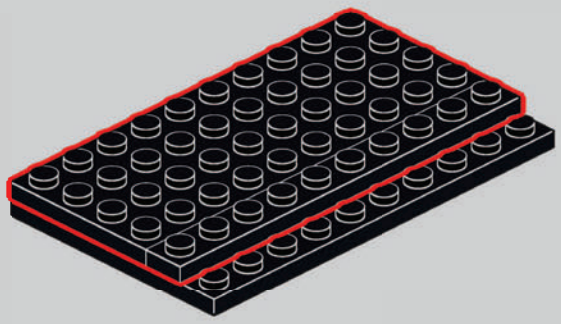

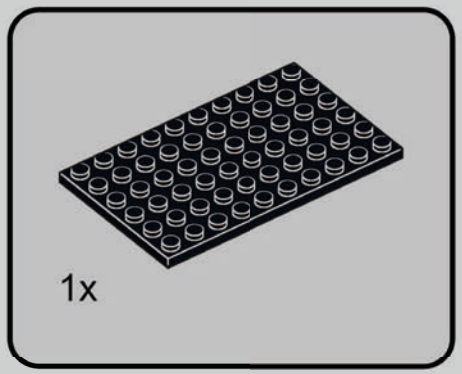

3

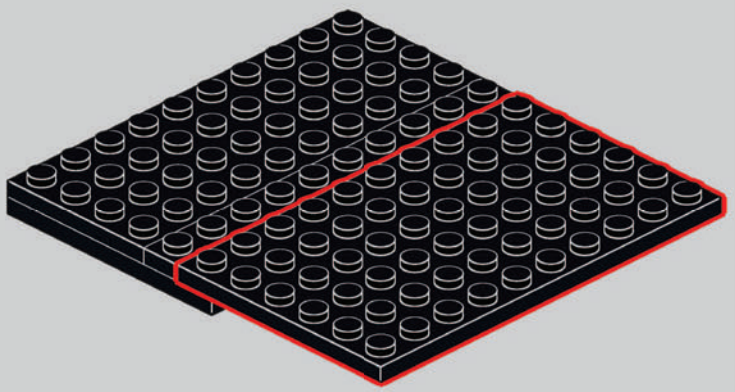

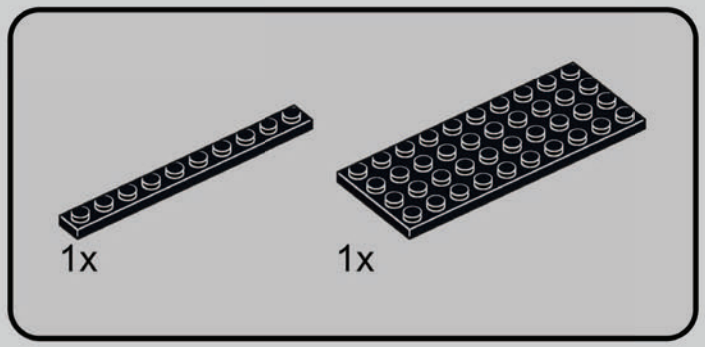

4

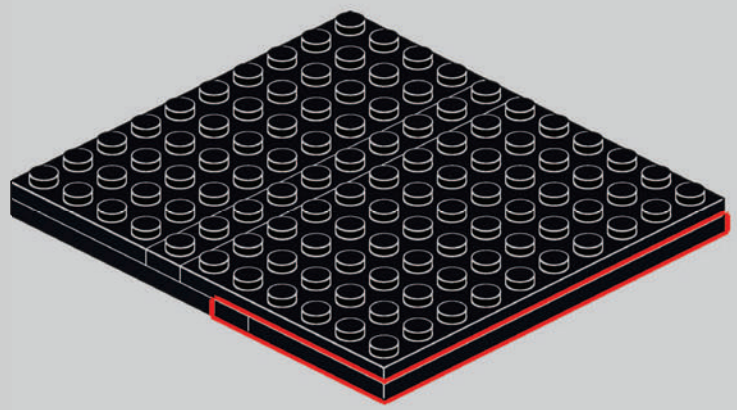

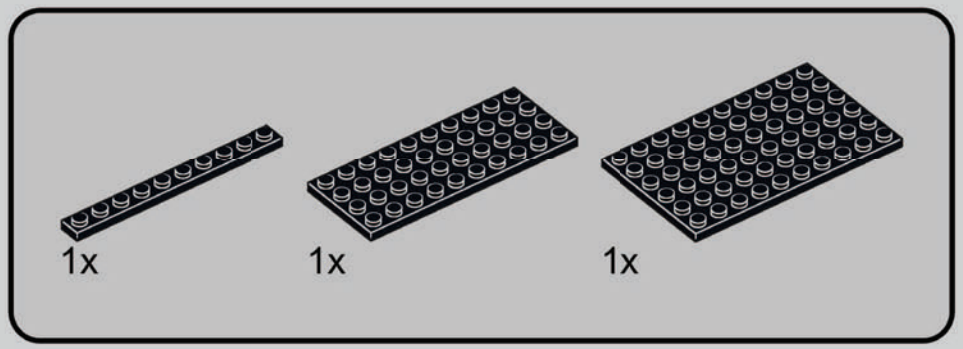

5

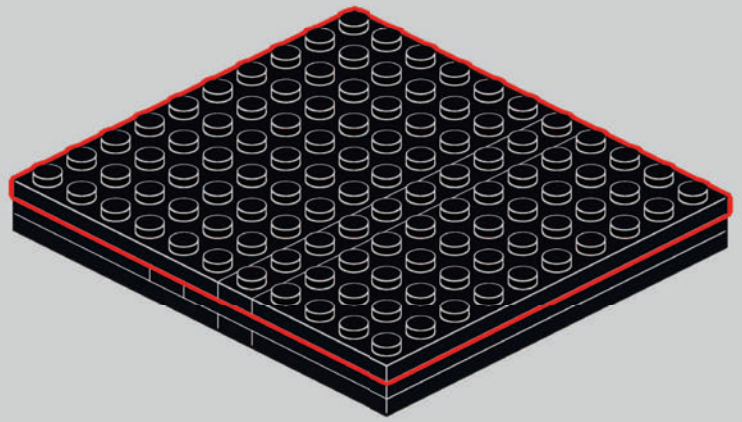

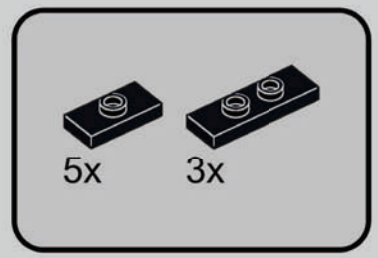

6

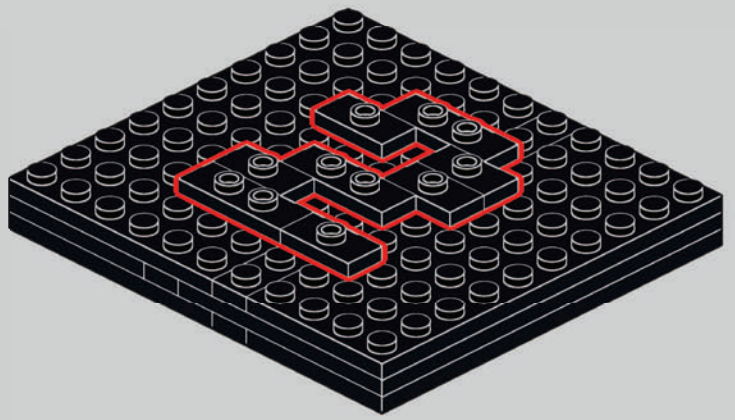

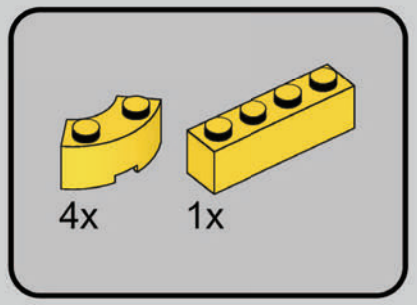

7

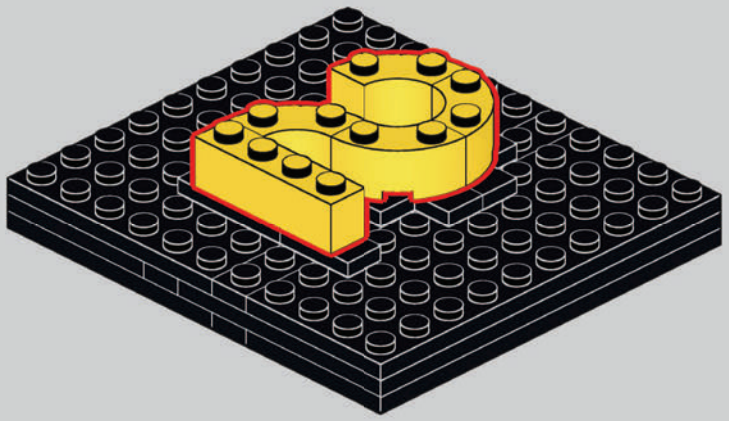

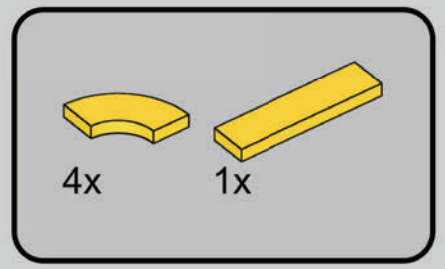

8

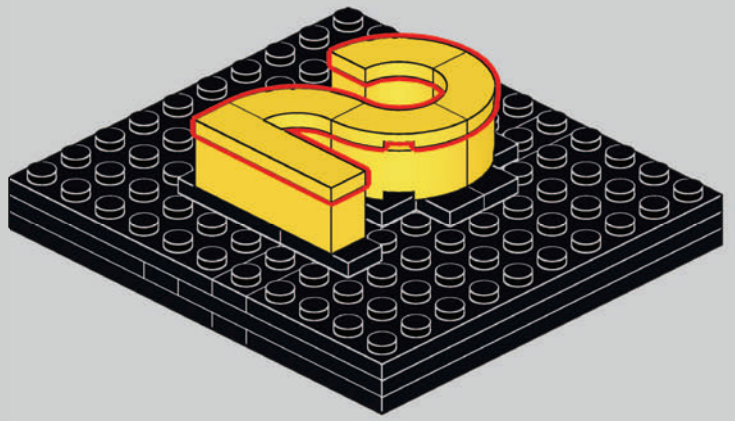

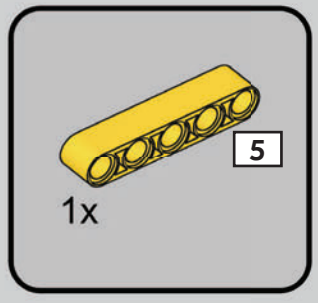

1

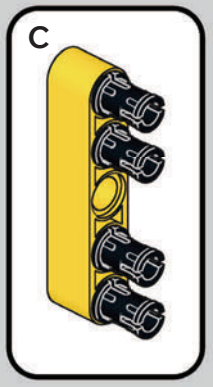



2

10x

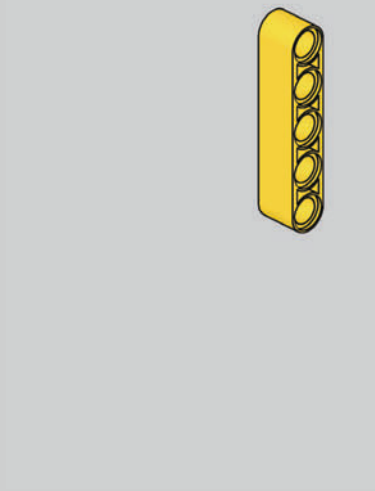



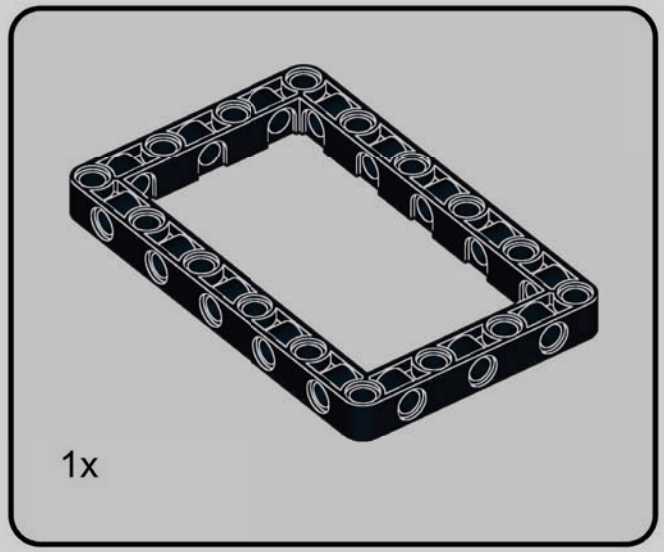

1

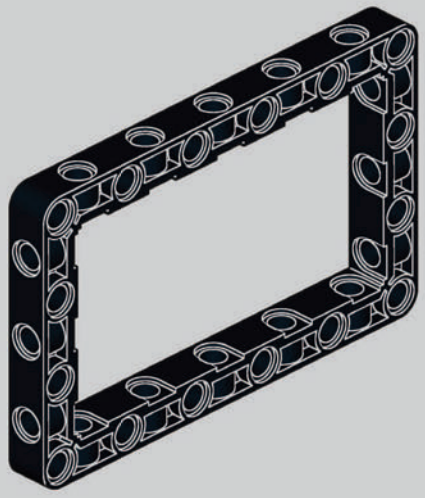

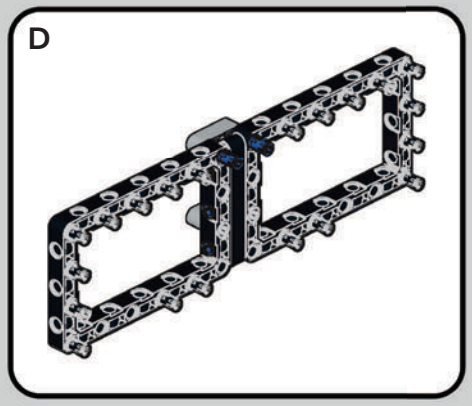



2

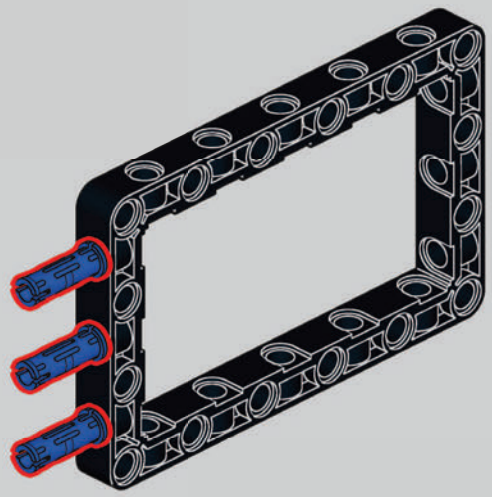

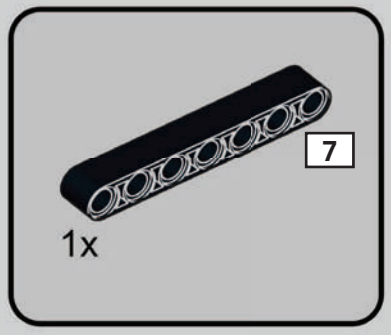

3

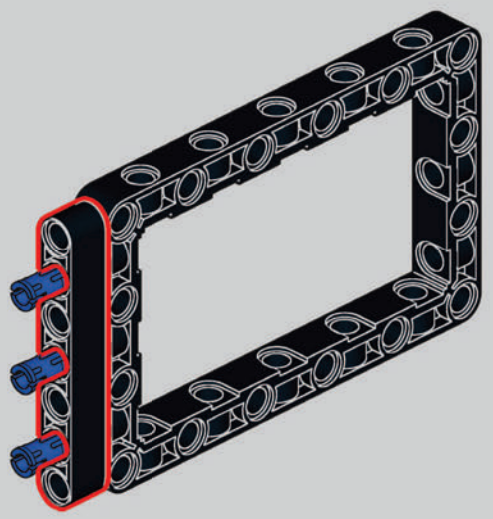

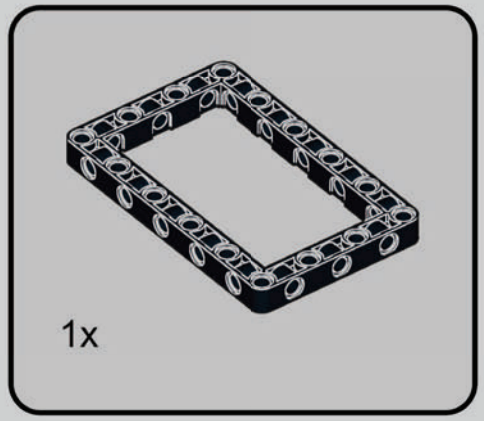

4

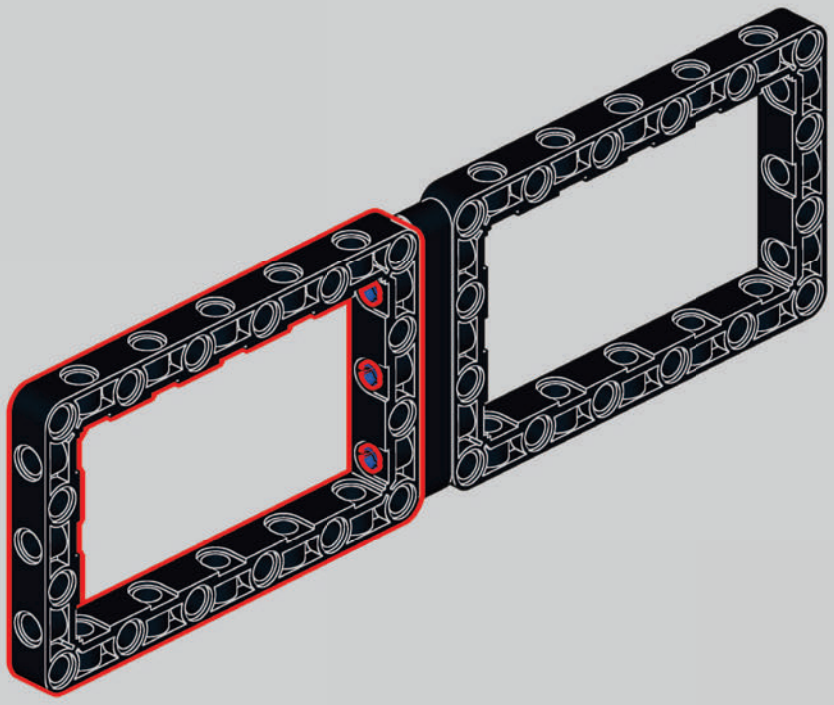

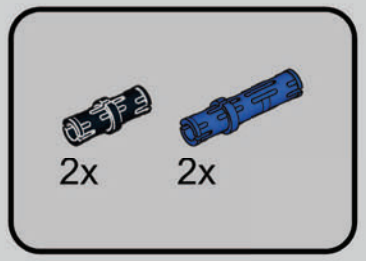

5

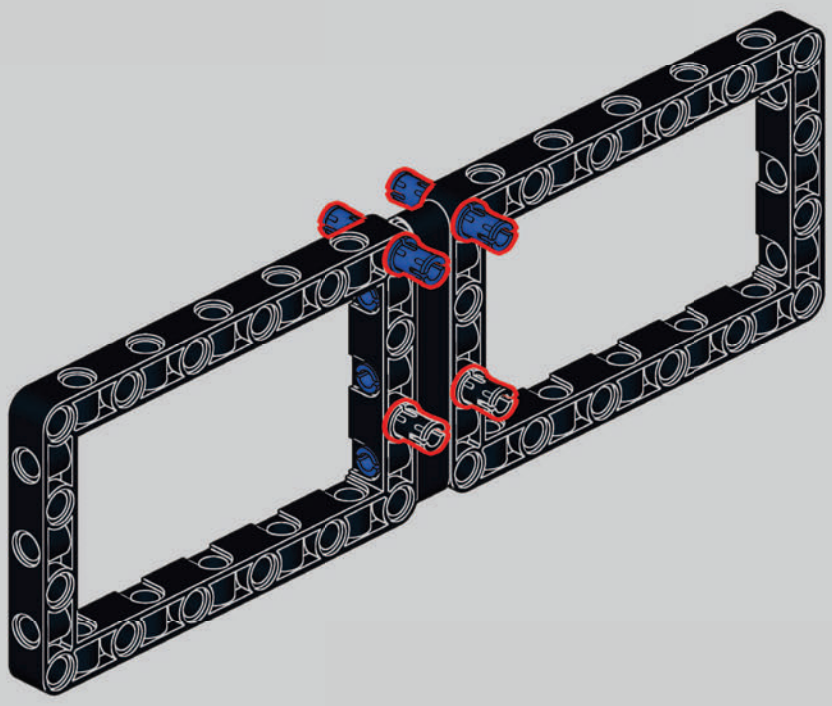

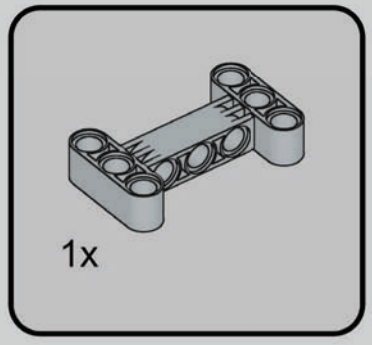

6

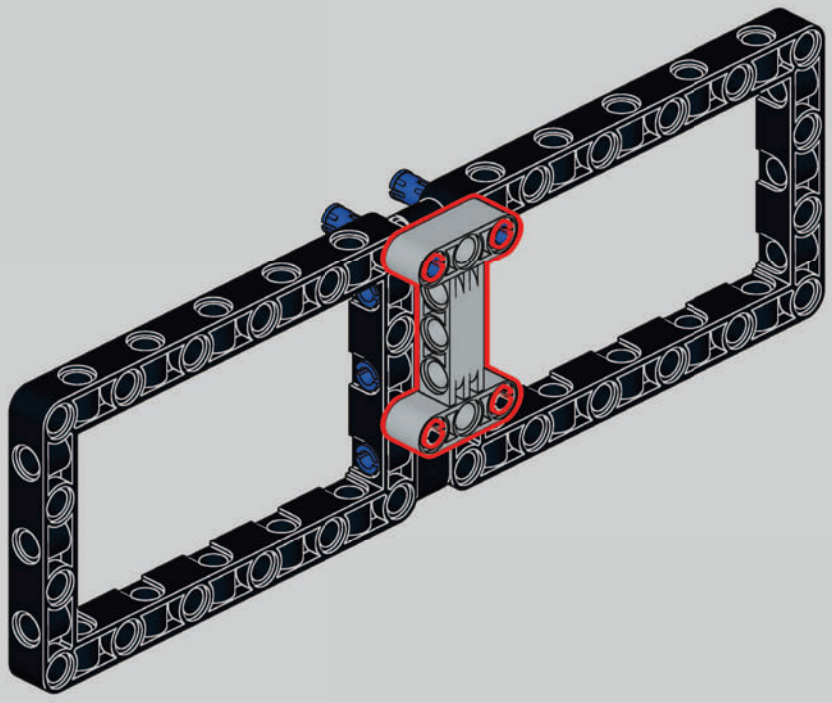



7

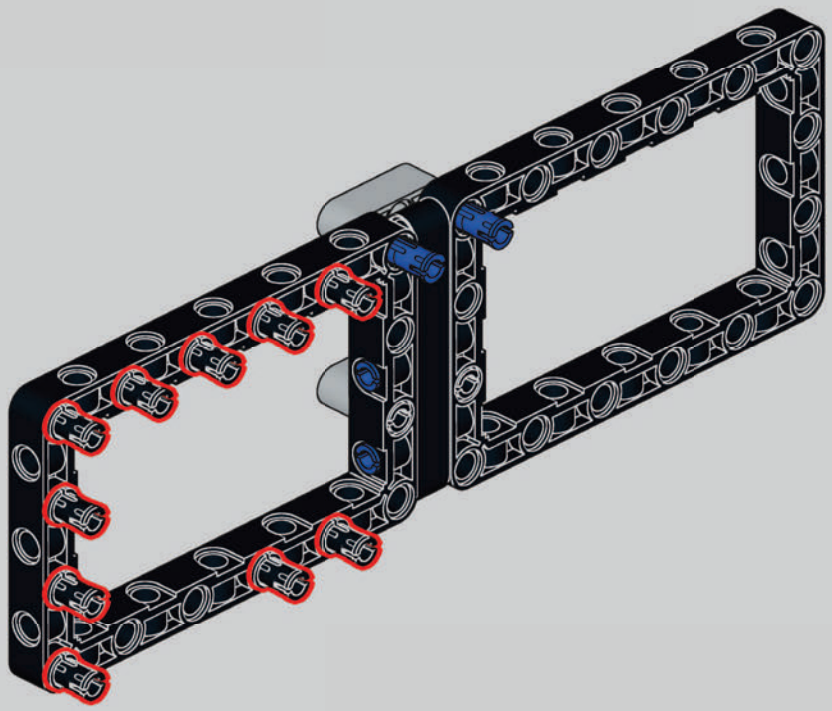



8

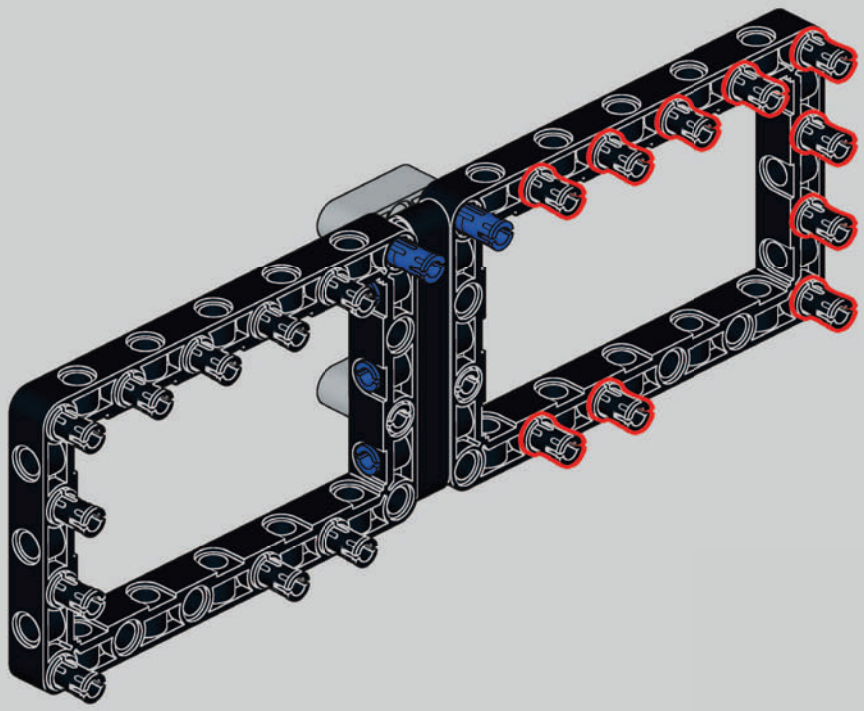

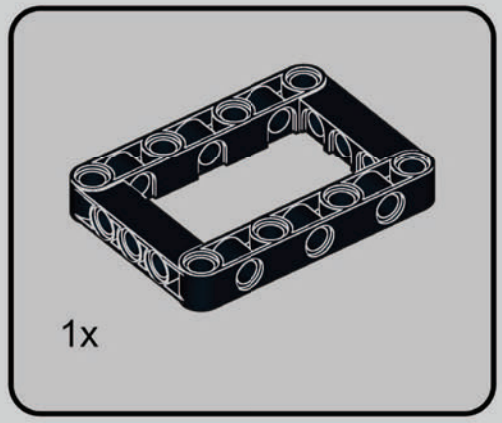

1

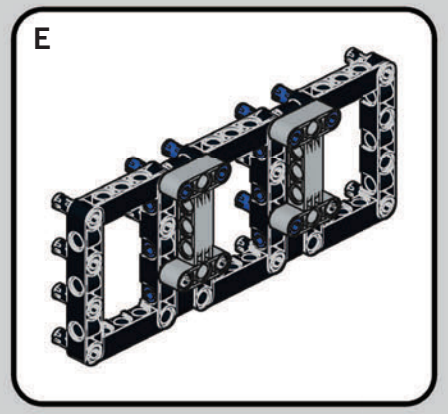



2



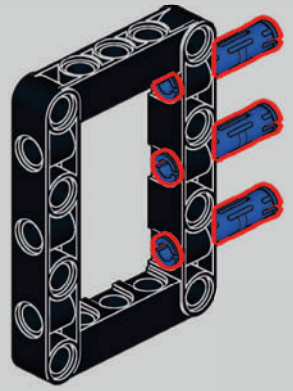

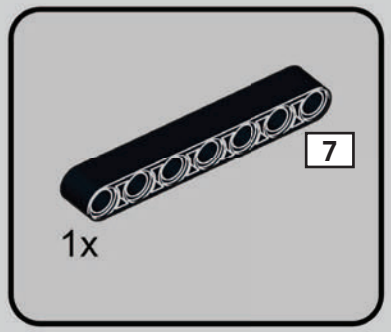

3

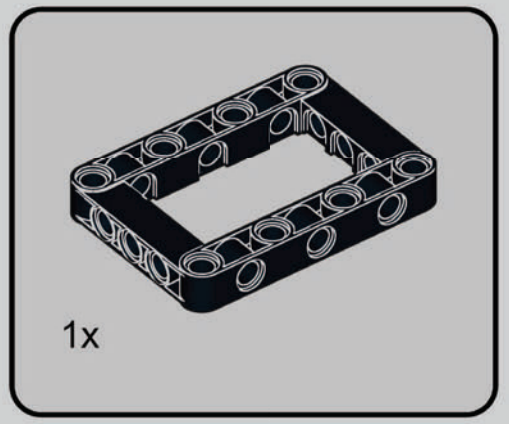

4

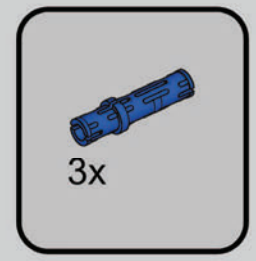

5

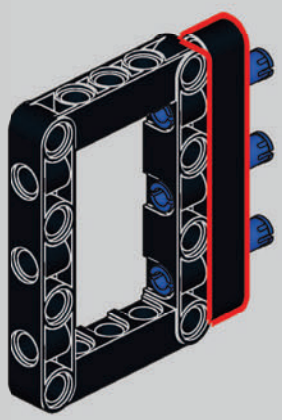

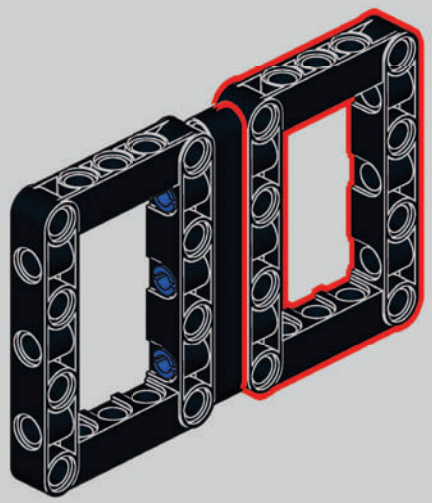

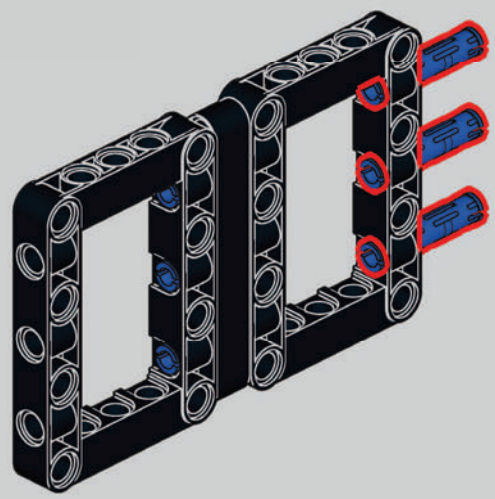

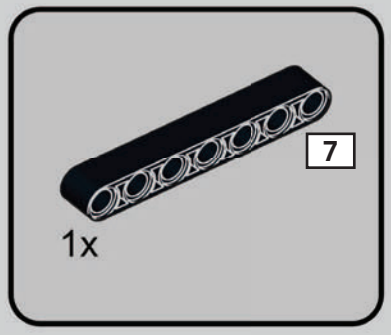

6

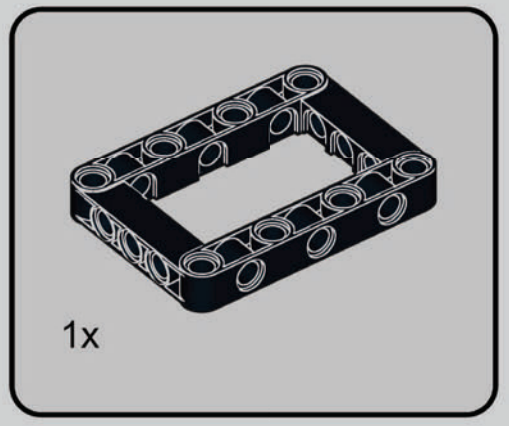

7

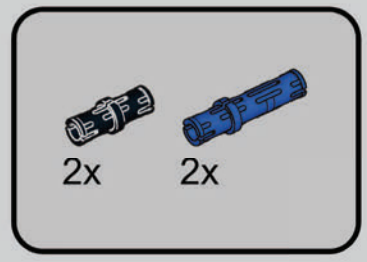

8

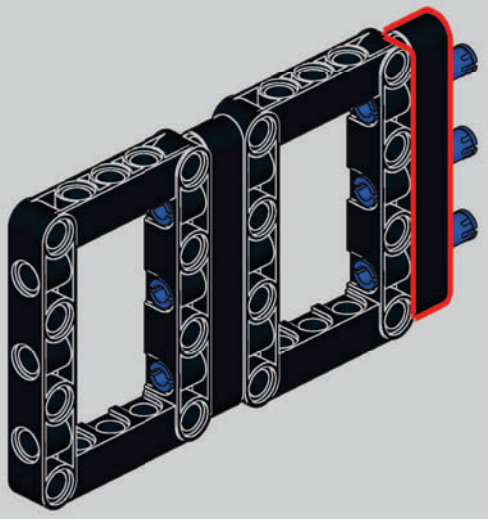

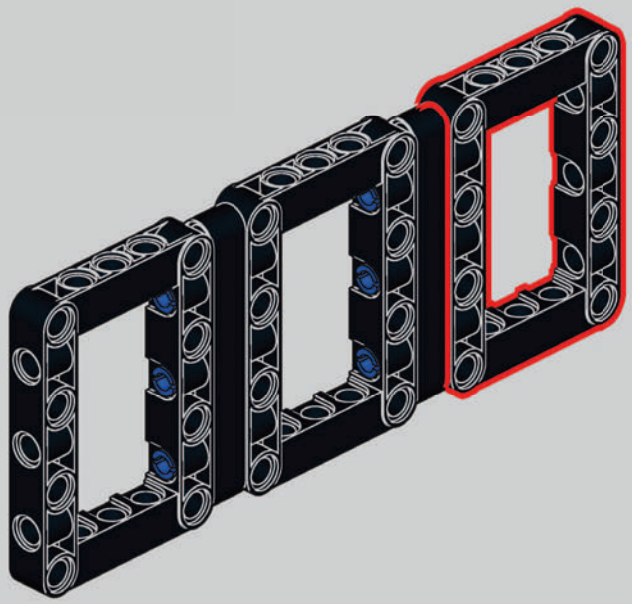

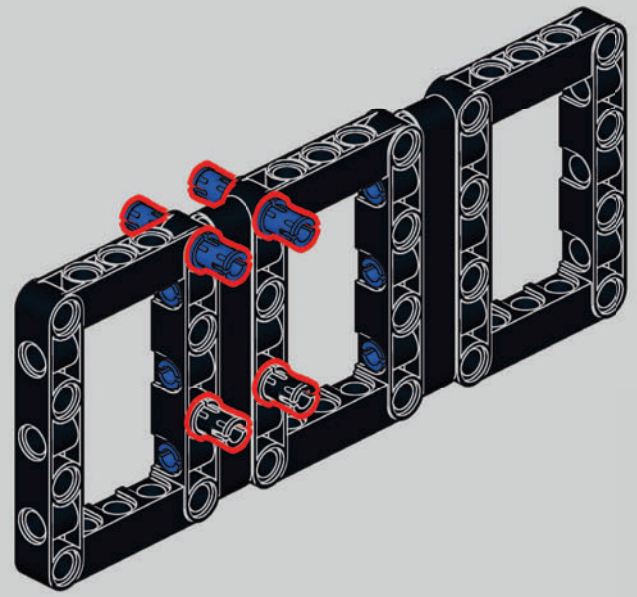

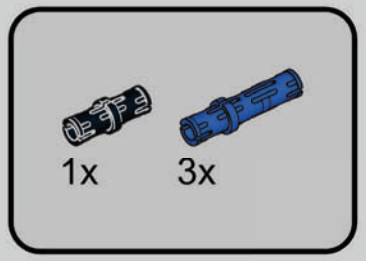

9

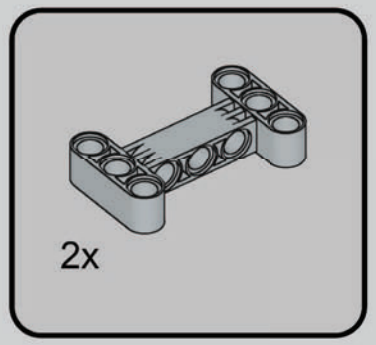

10

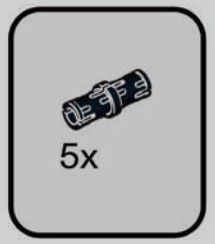

11

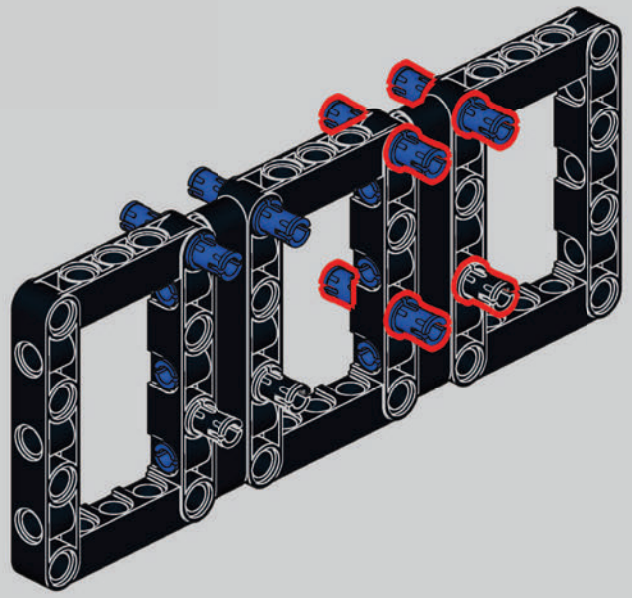

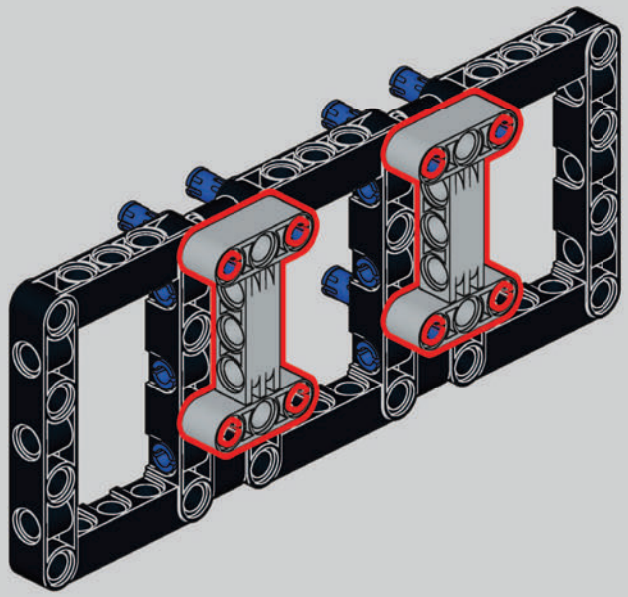

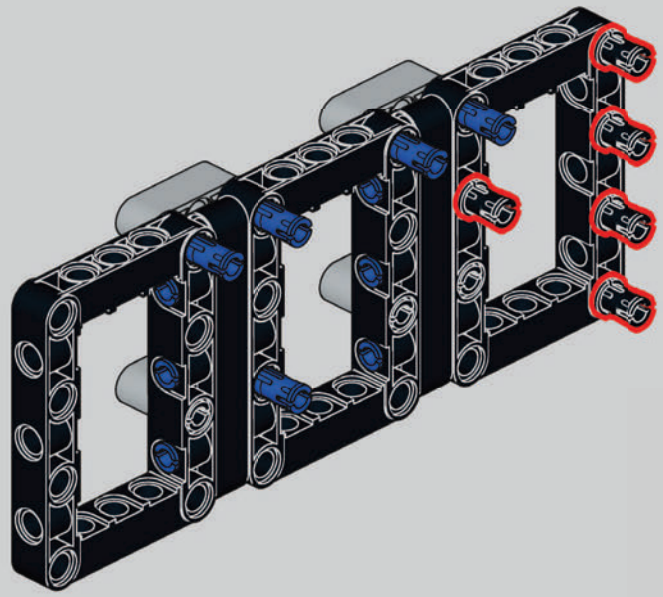



12

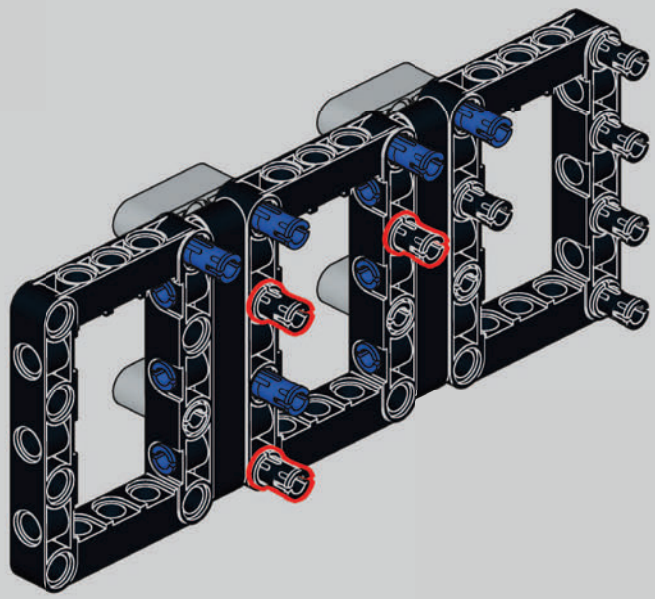



13

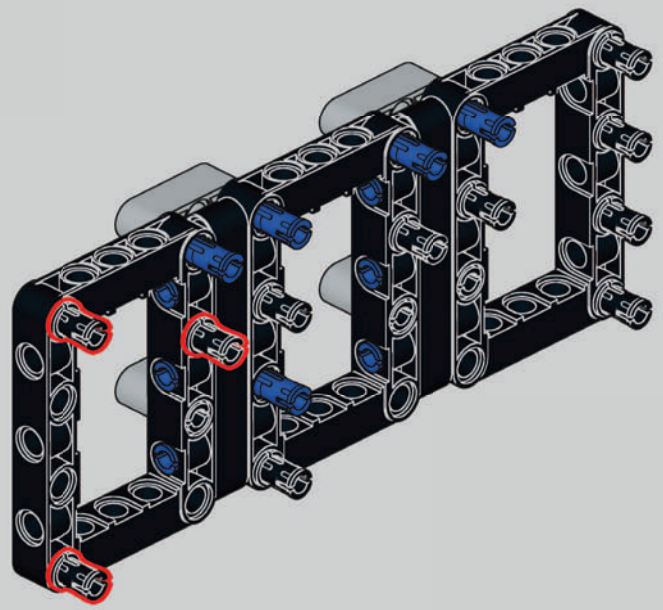

1x

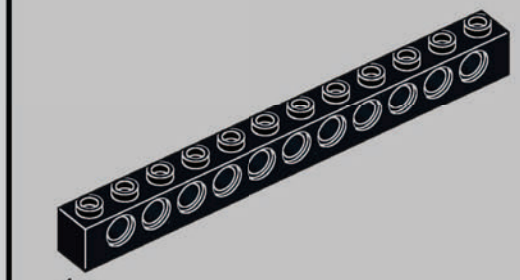

1

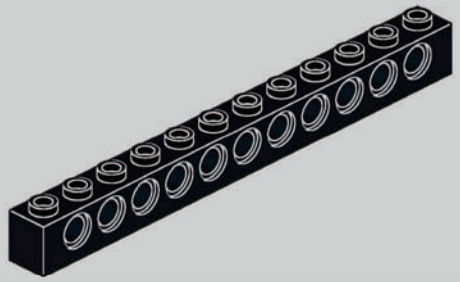

F

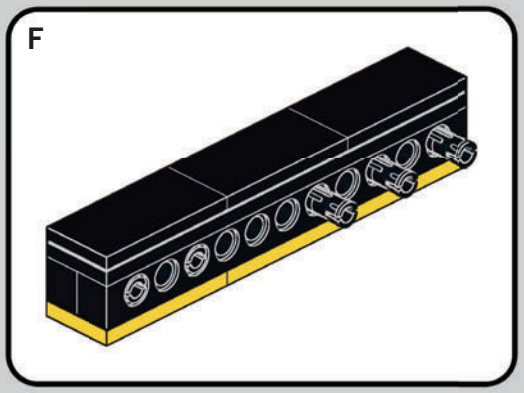

4x

2x

2

1x

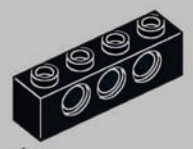

3

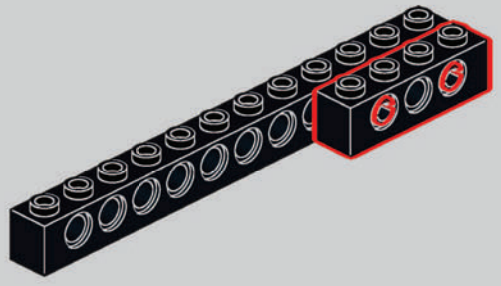

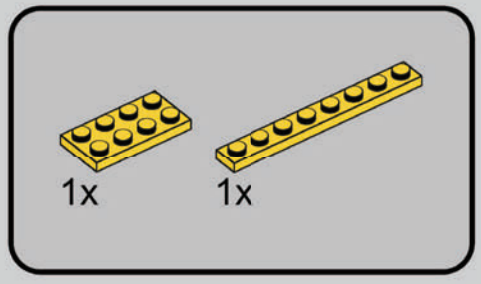

4

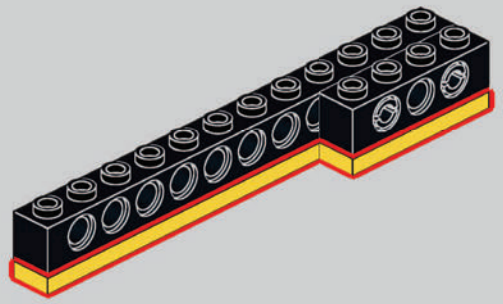

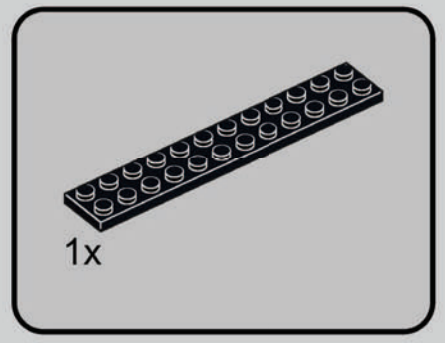

5

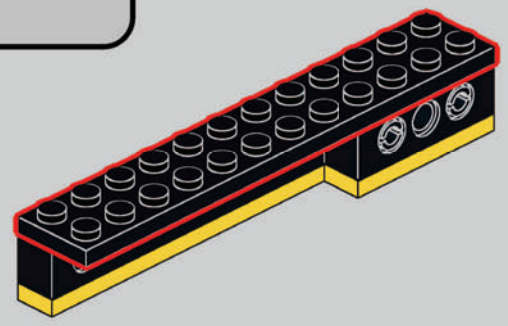

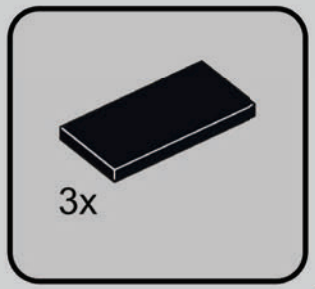

6

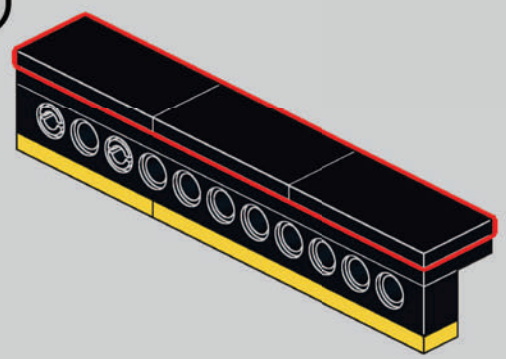



7

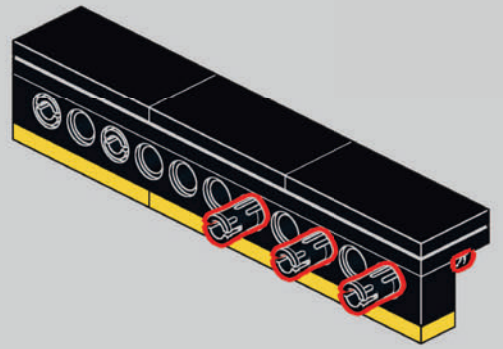

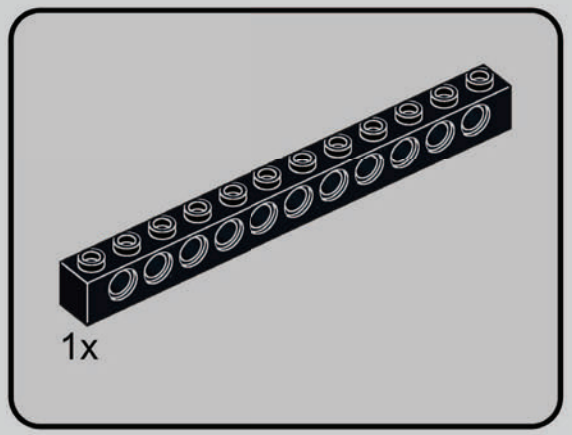

1

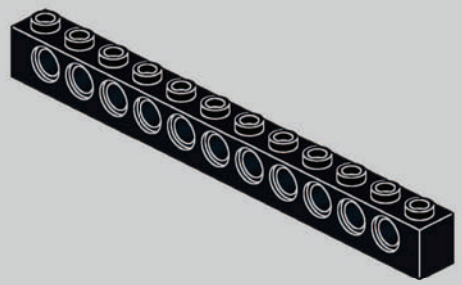

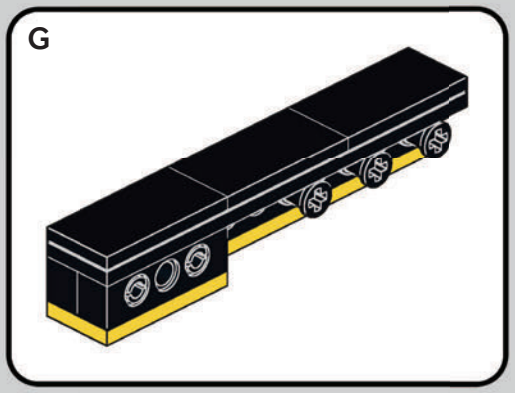

3x



2

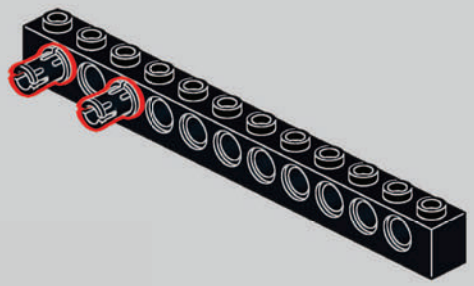

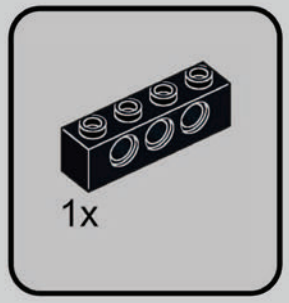

3

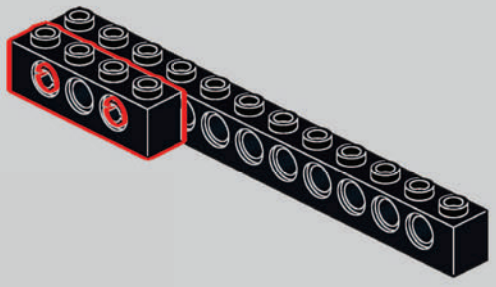

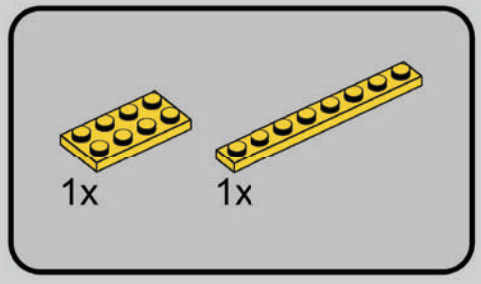

4

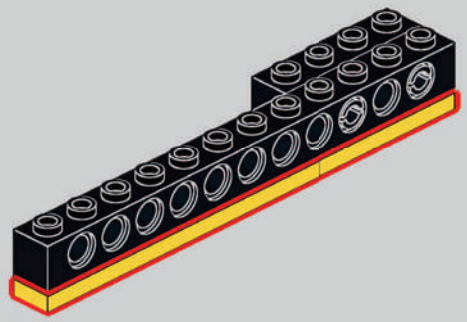

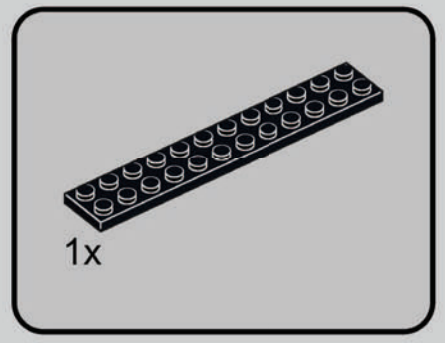

5

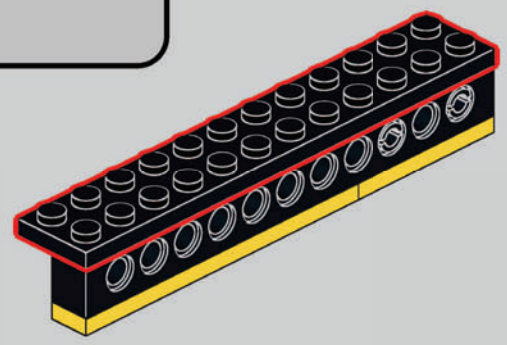

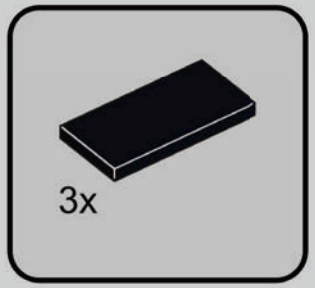

6

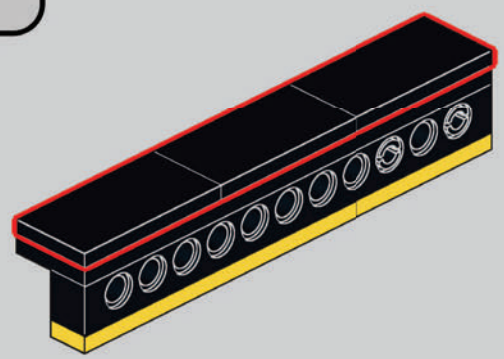



7

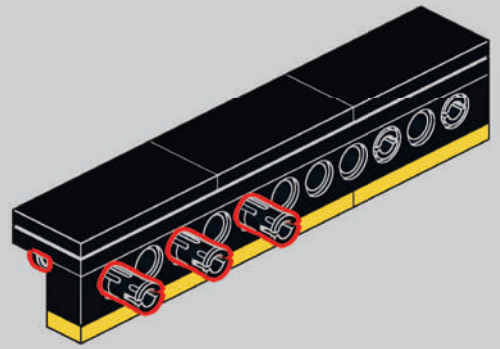

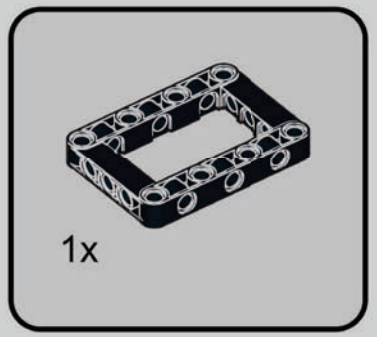

1

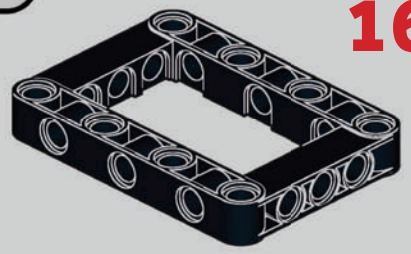

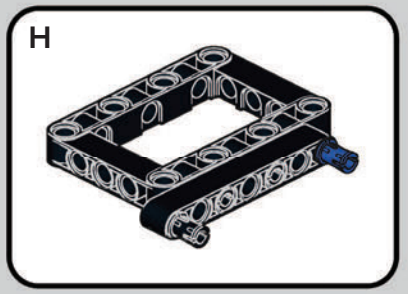

16x



2

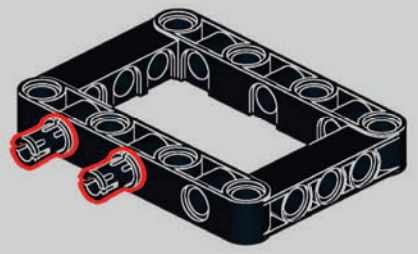

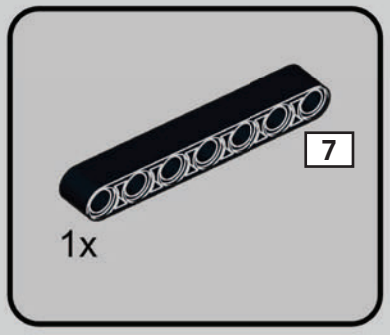

3

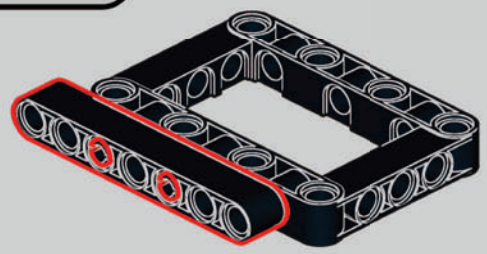

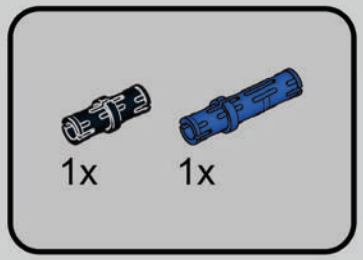

4

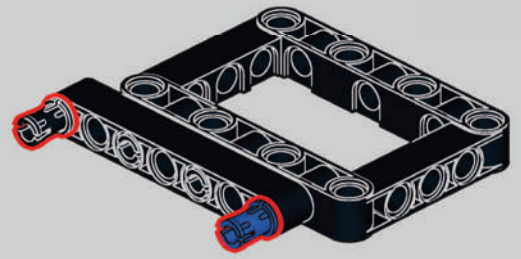

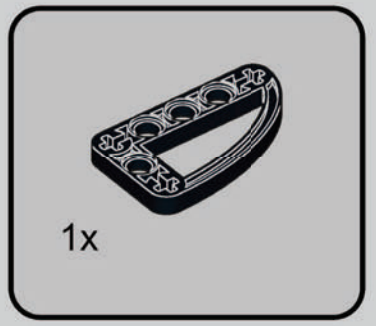

1



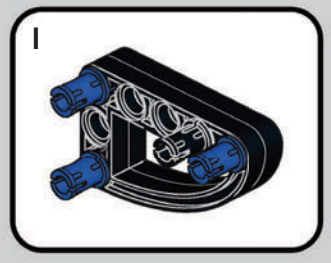

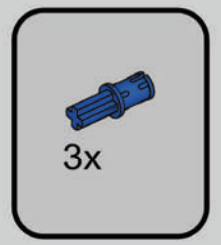

2

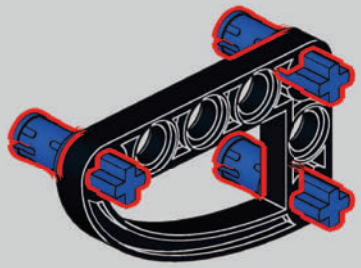

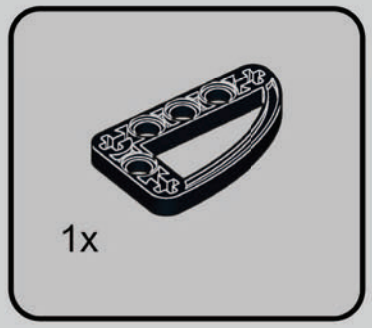

3

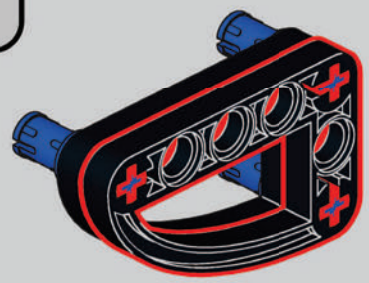

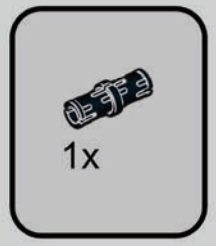

4

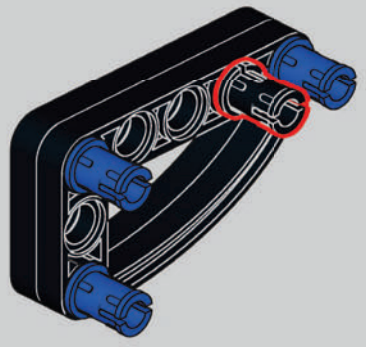

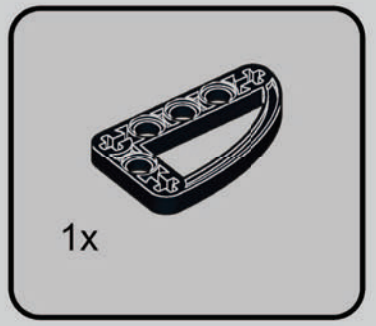

1



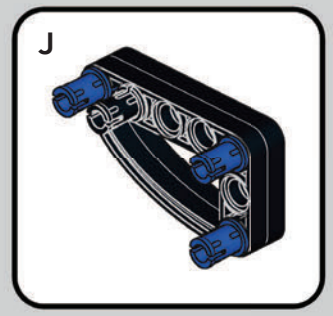

8x

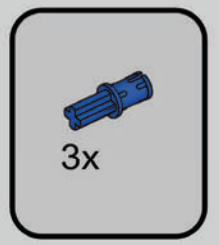

2



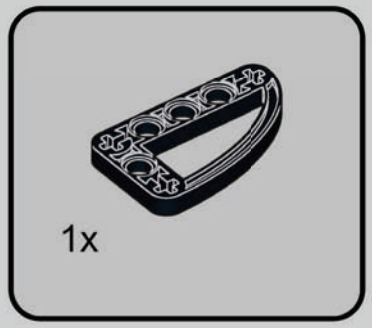

3

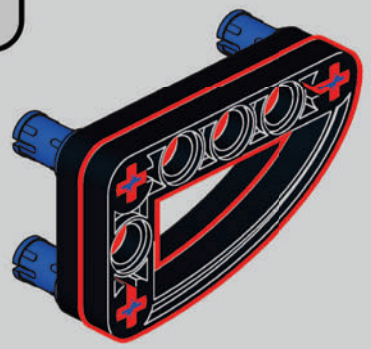

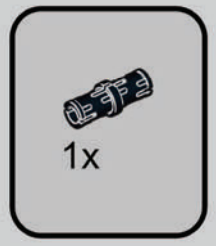

4

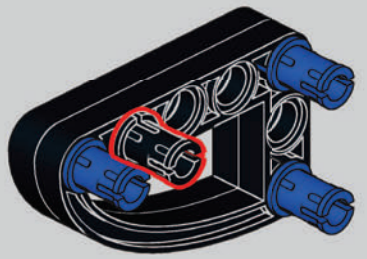

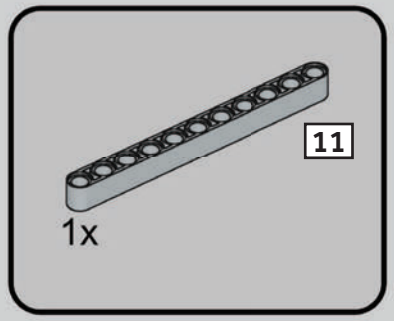

1

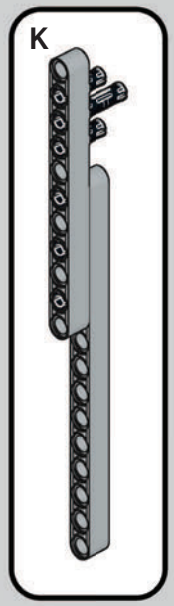

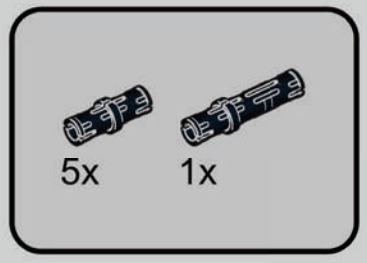

2

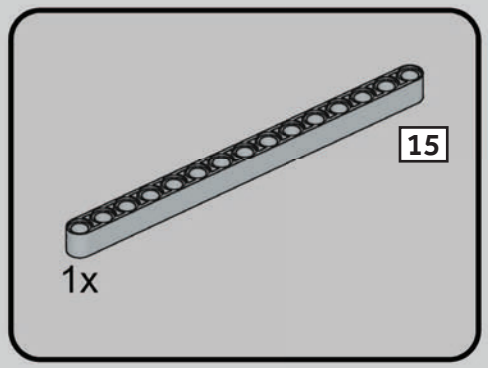

3

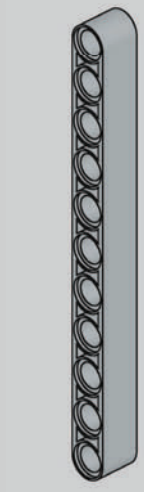

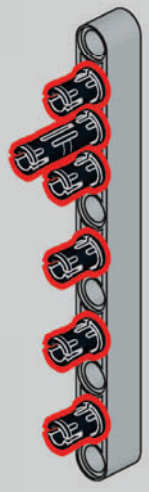

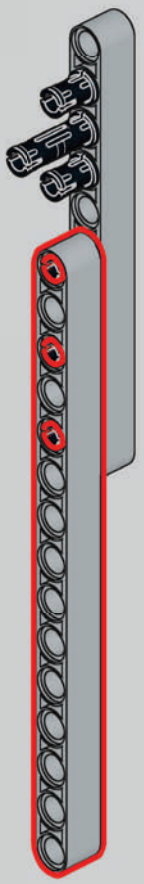

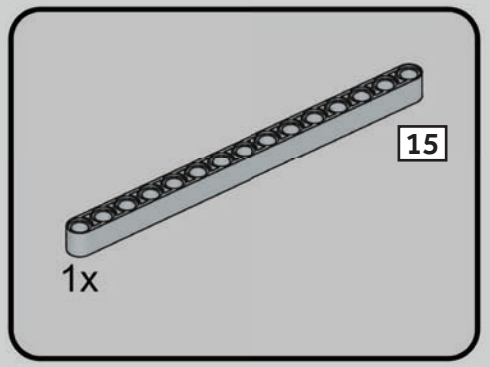

1

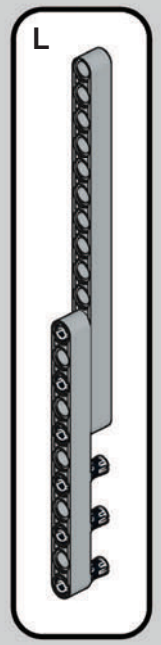



2

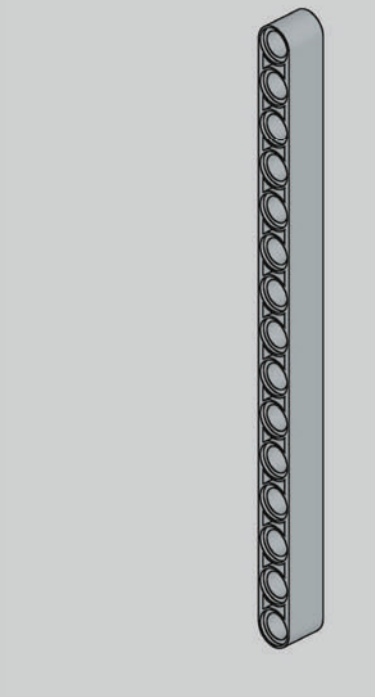

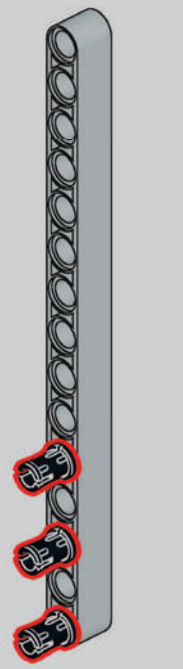

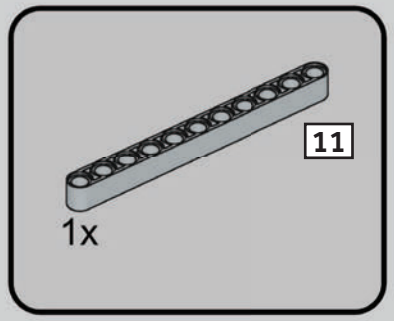

3



4

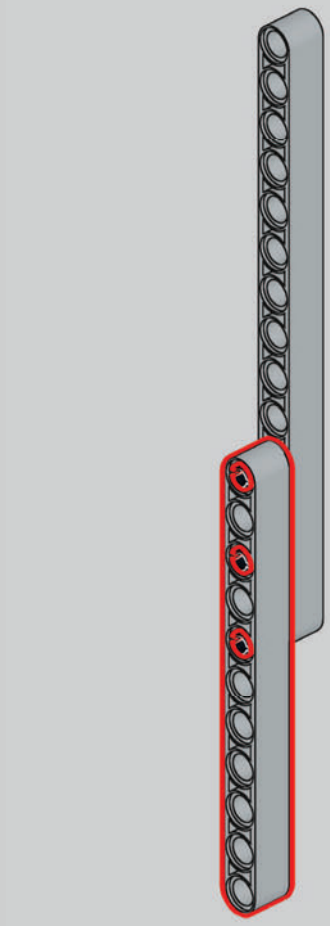

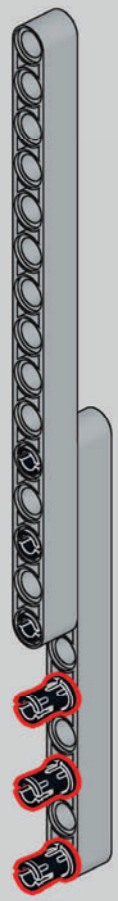

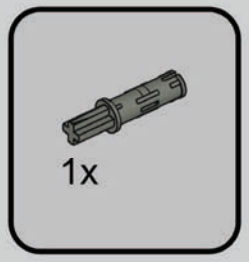

1

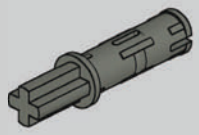

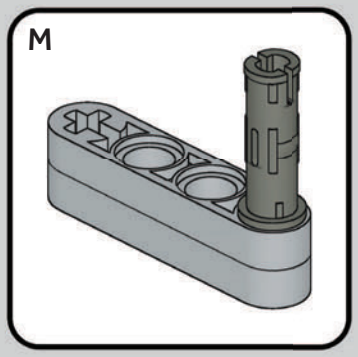

6x

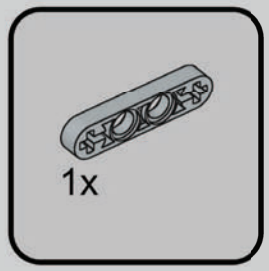

2

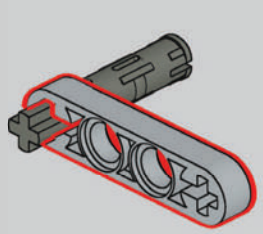

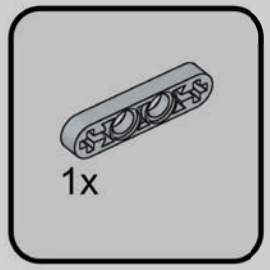

3

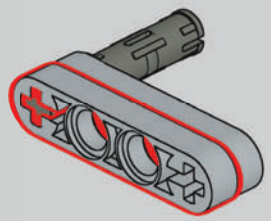

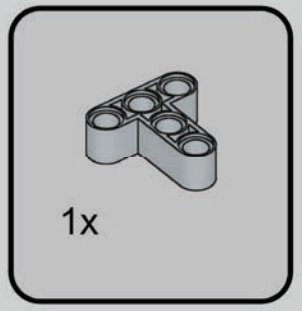

1

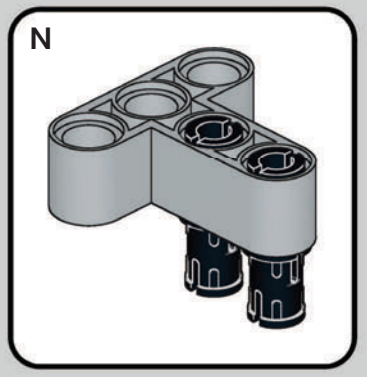

2x



2

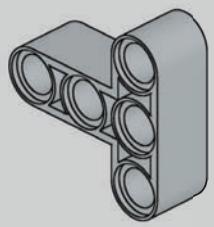

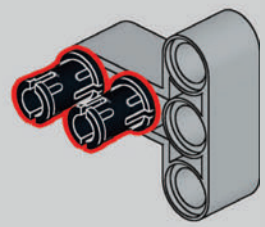

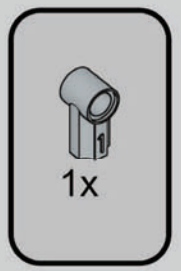

1

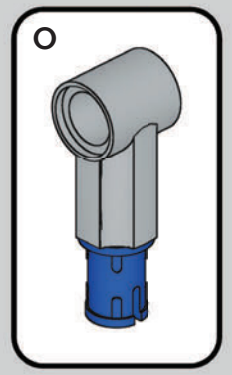

8x

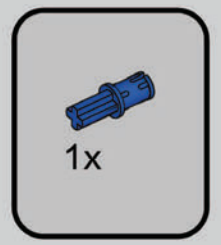

2

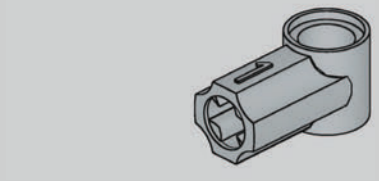

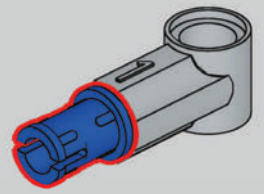

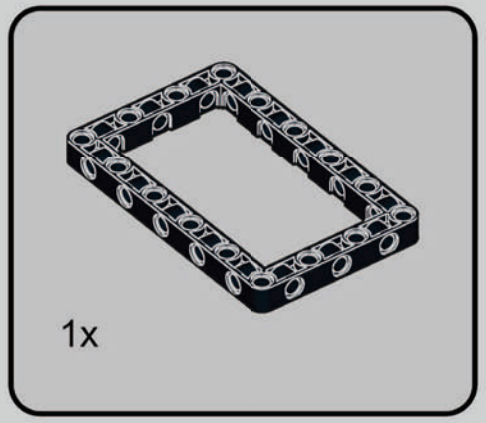

1

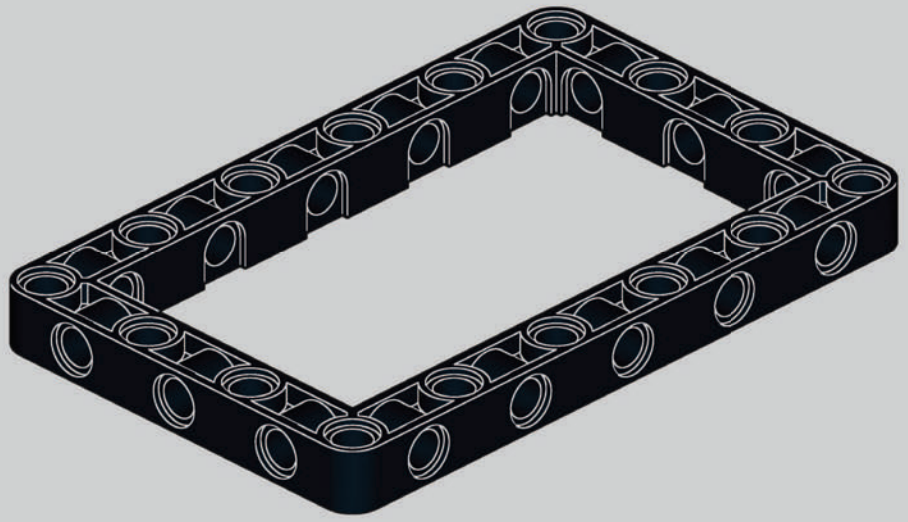

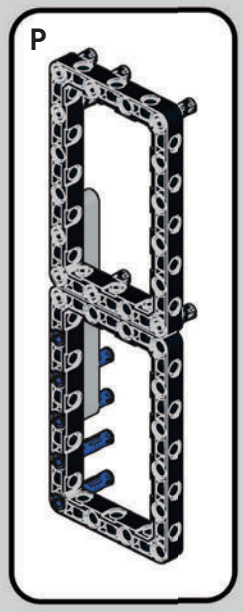

2x



2

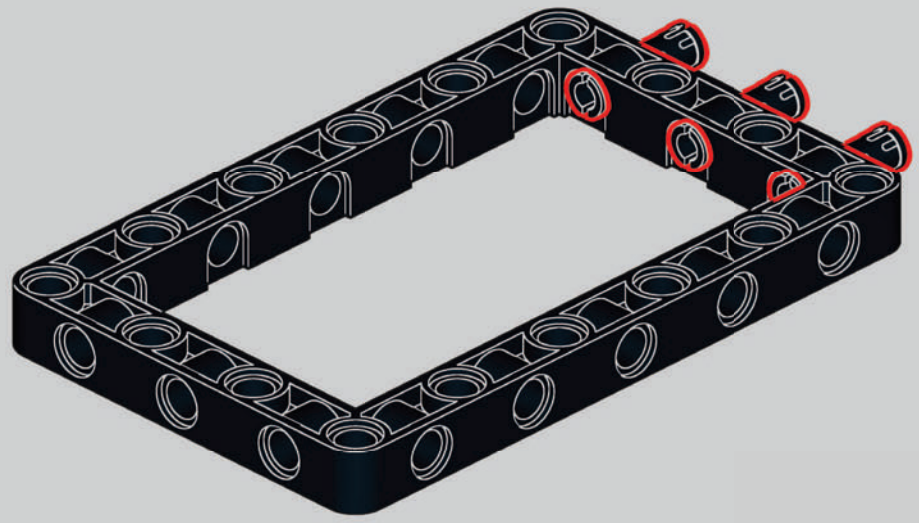

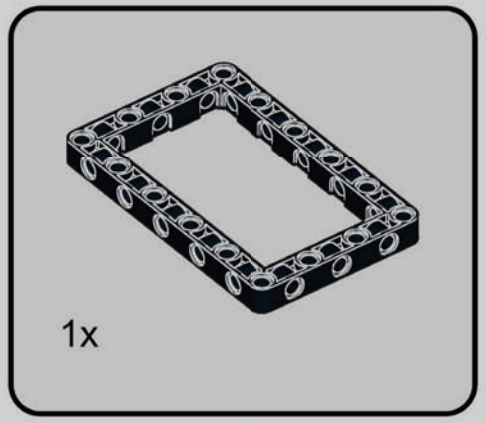

3

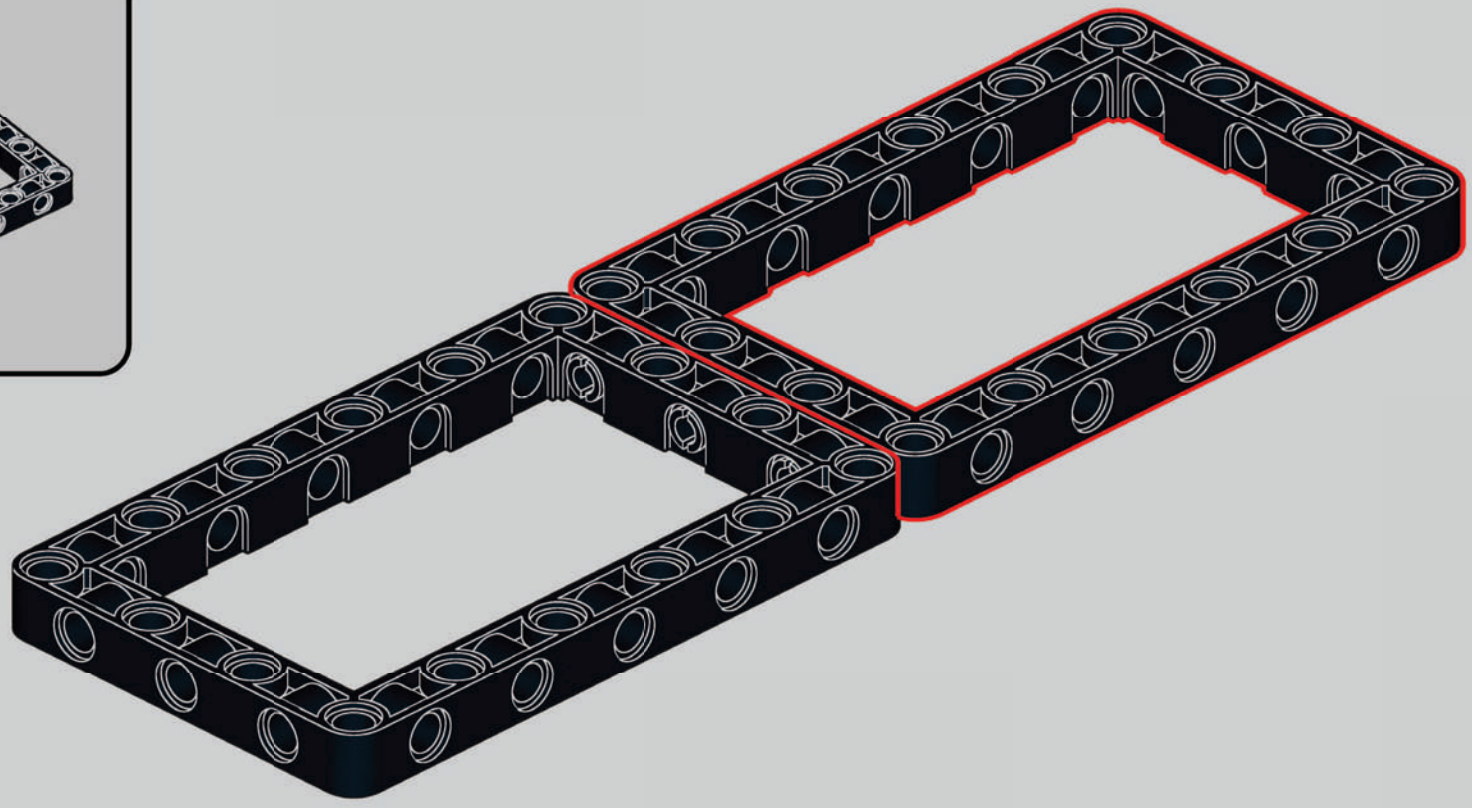



4

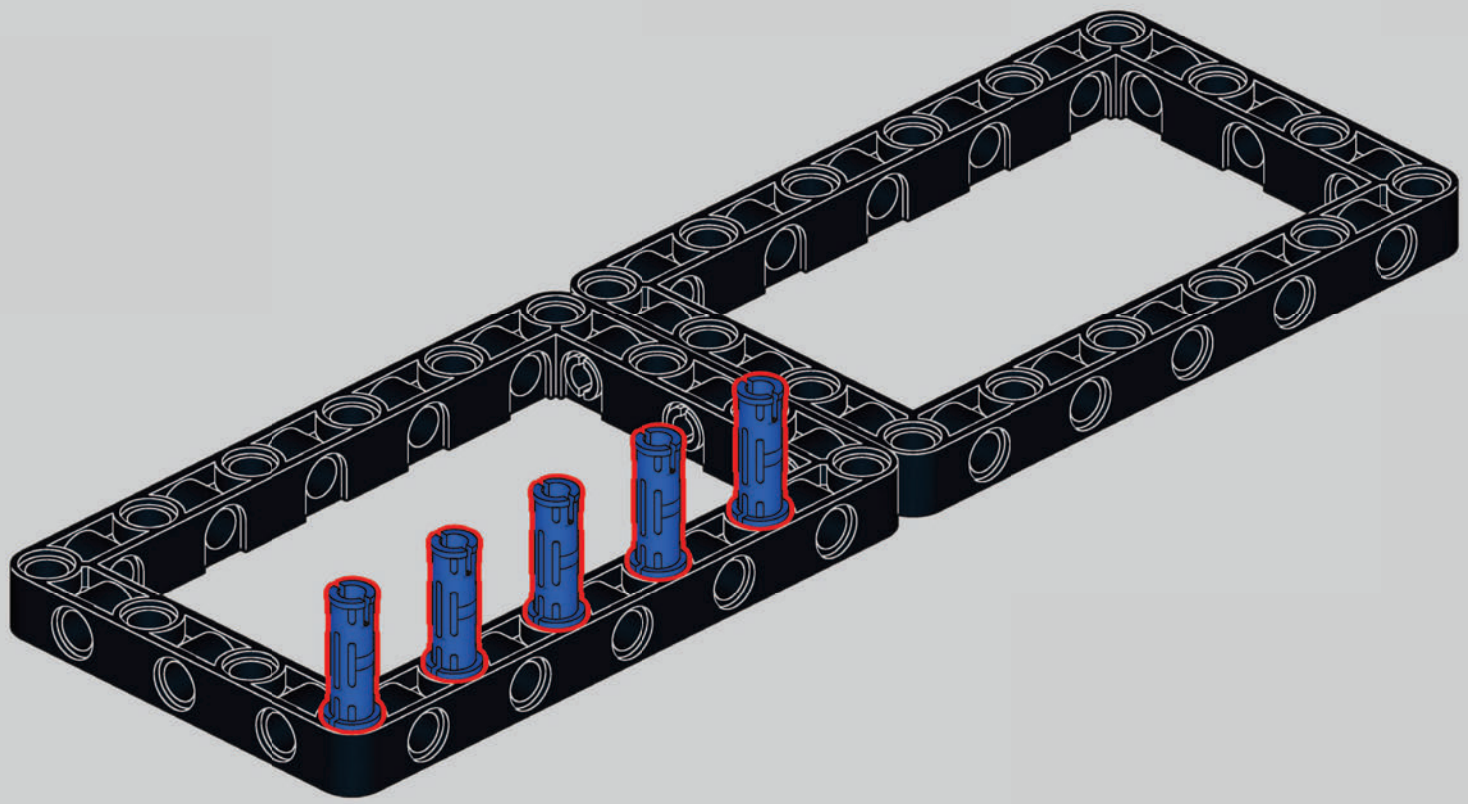



5

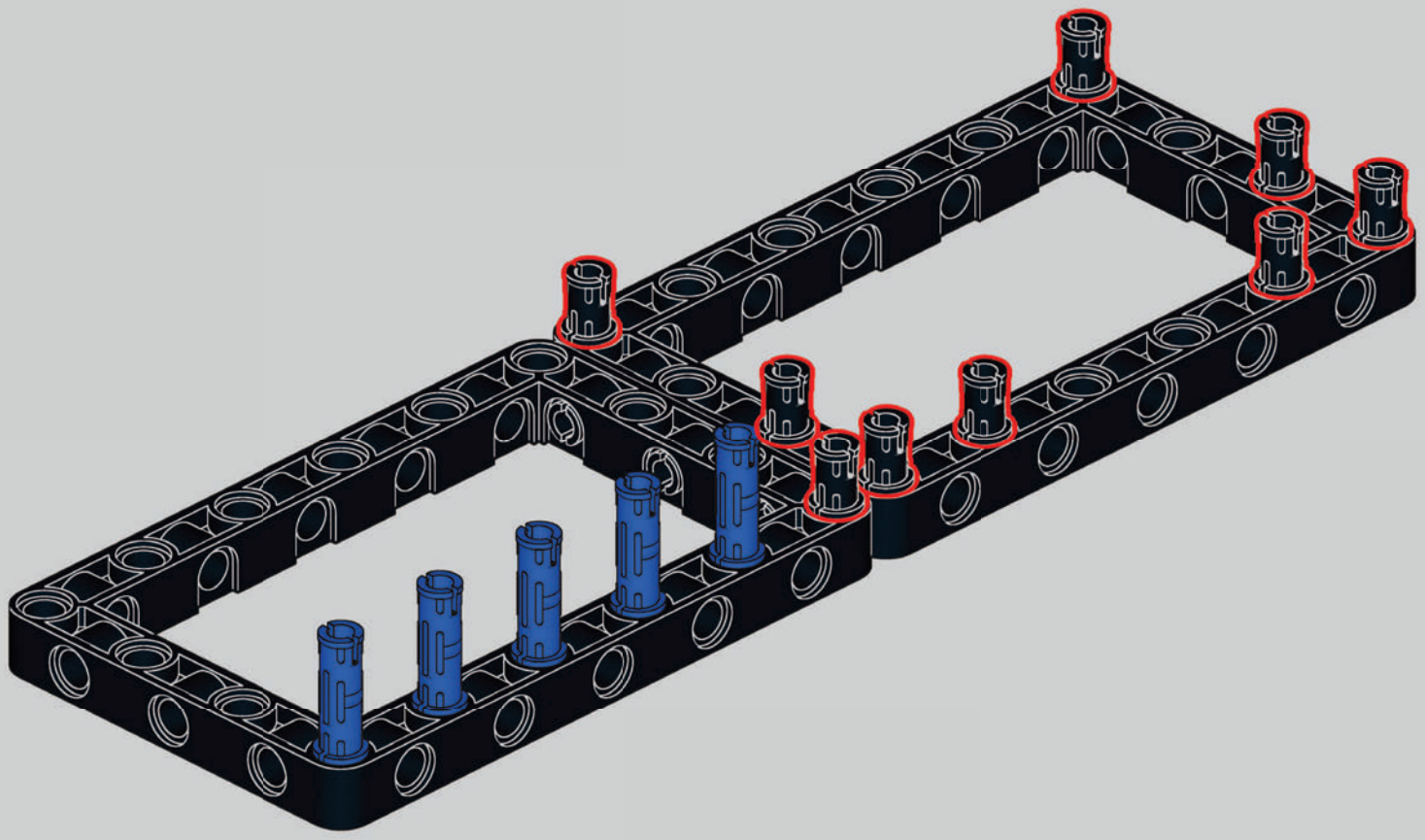

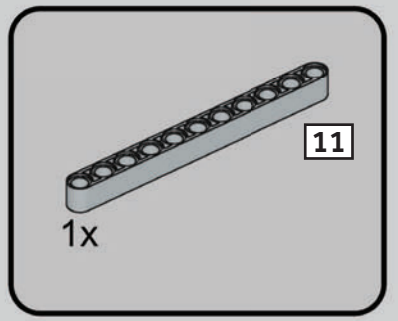

6

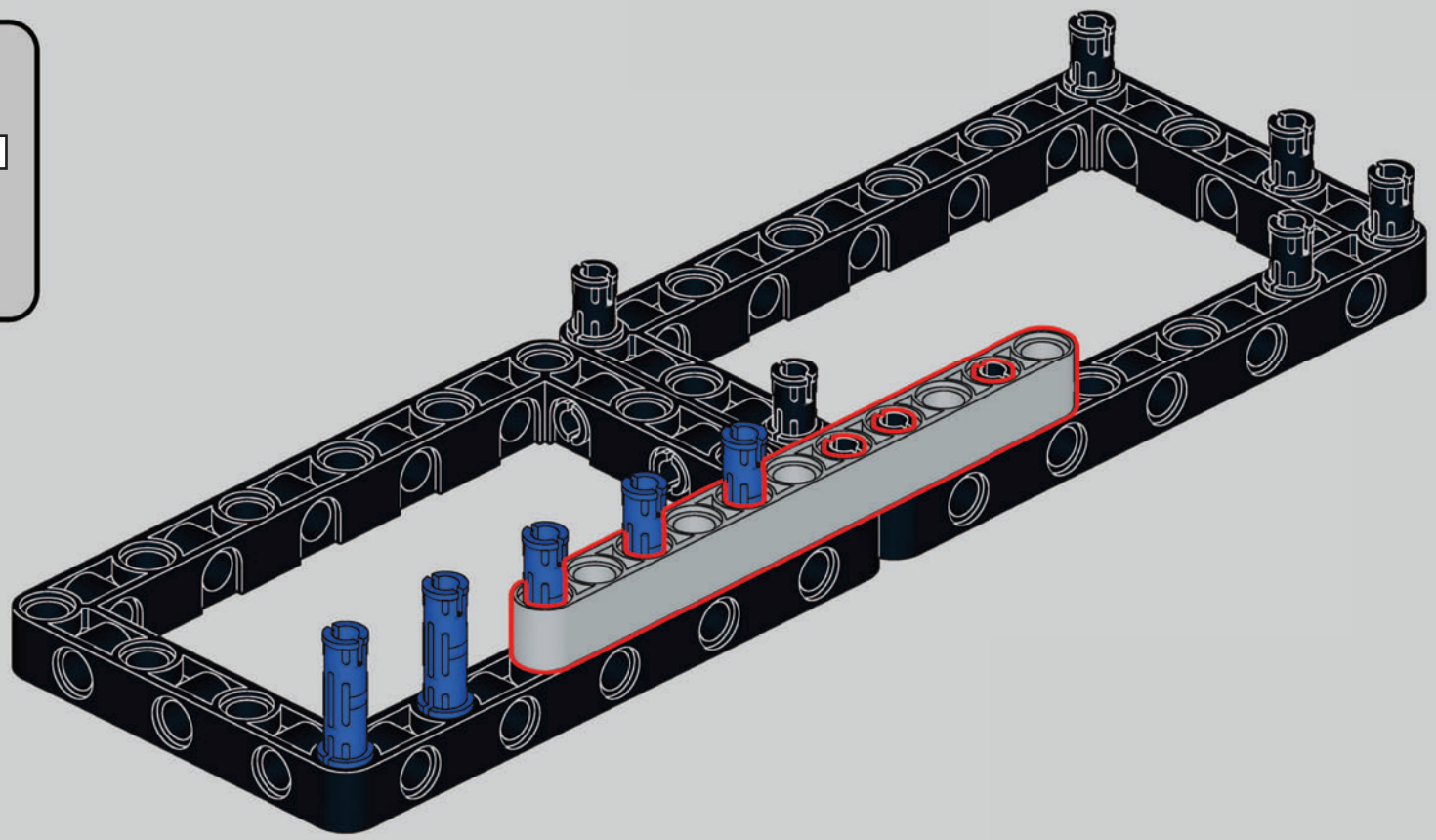

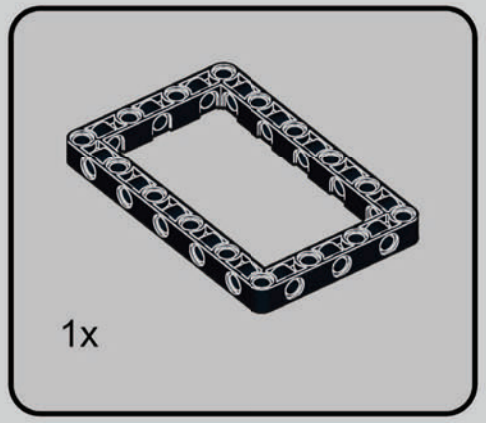

1

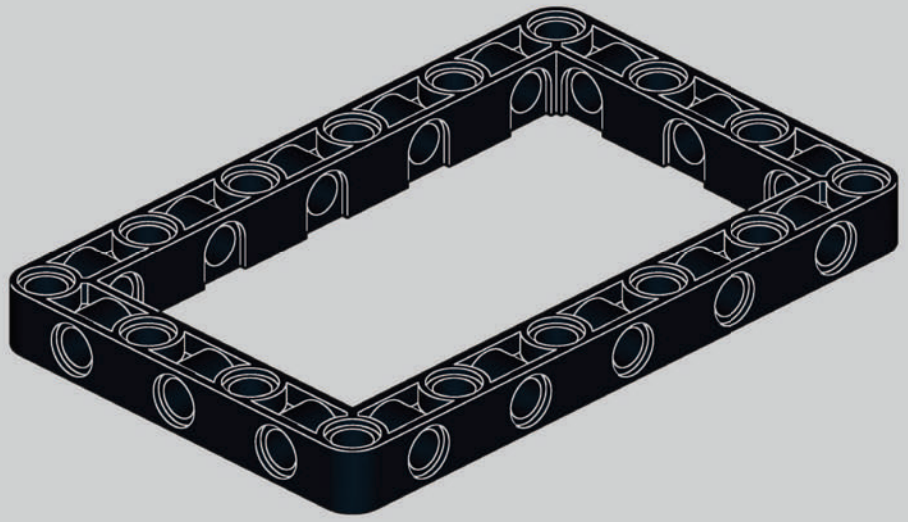

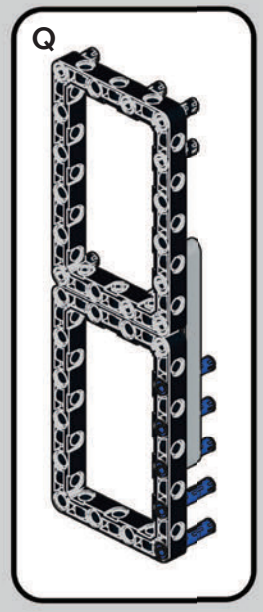

2x



2

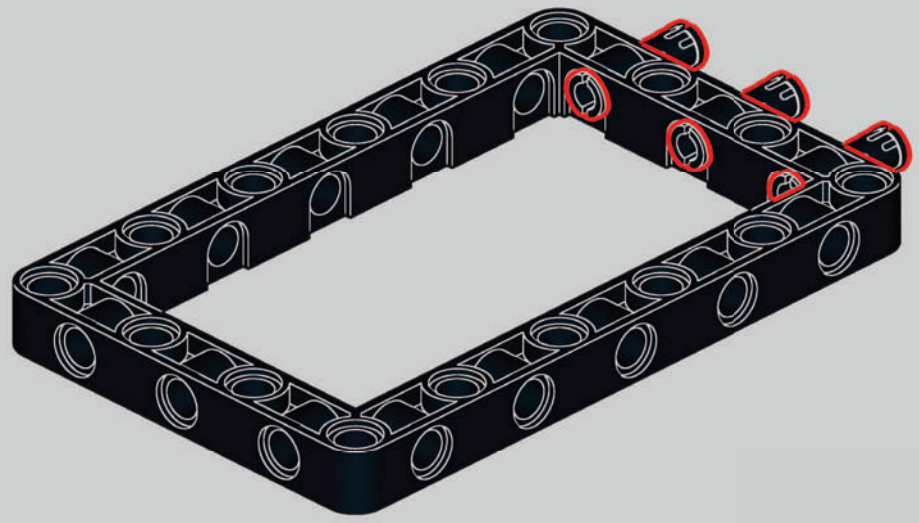

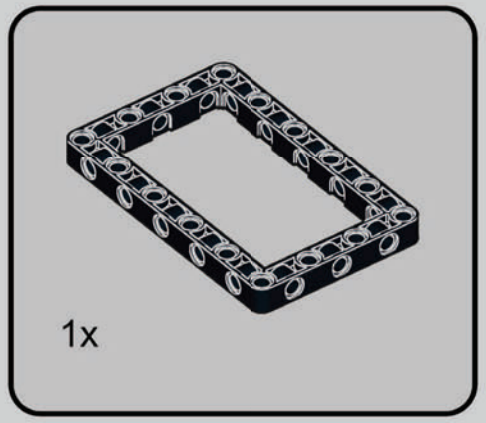

3

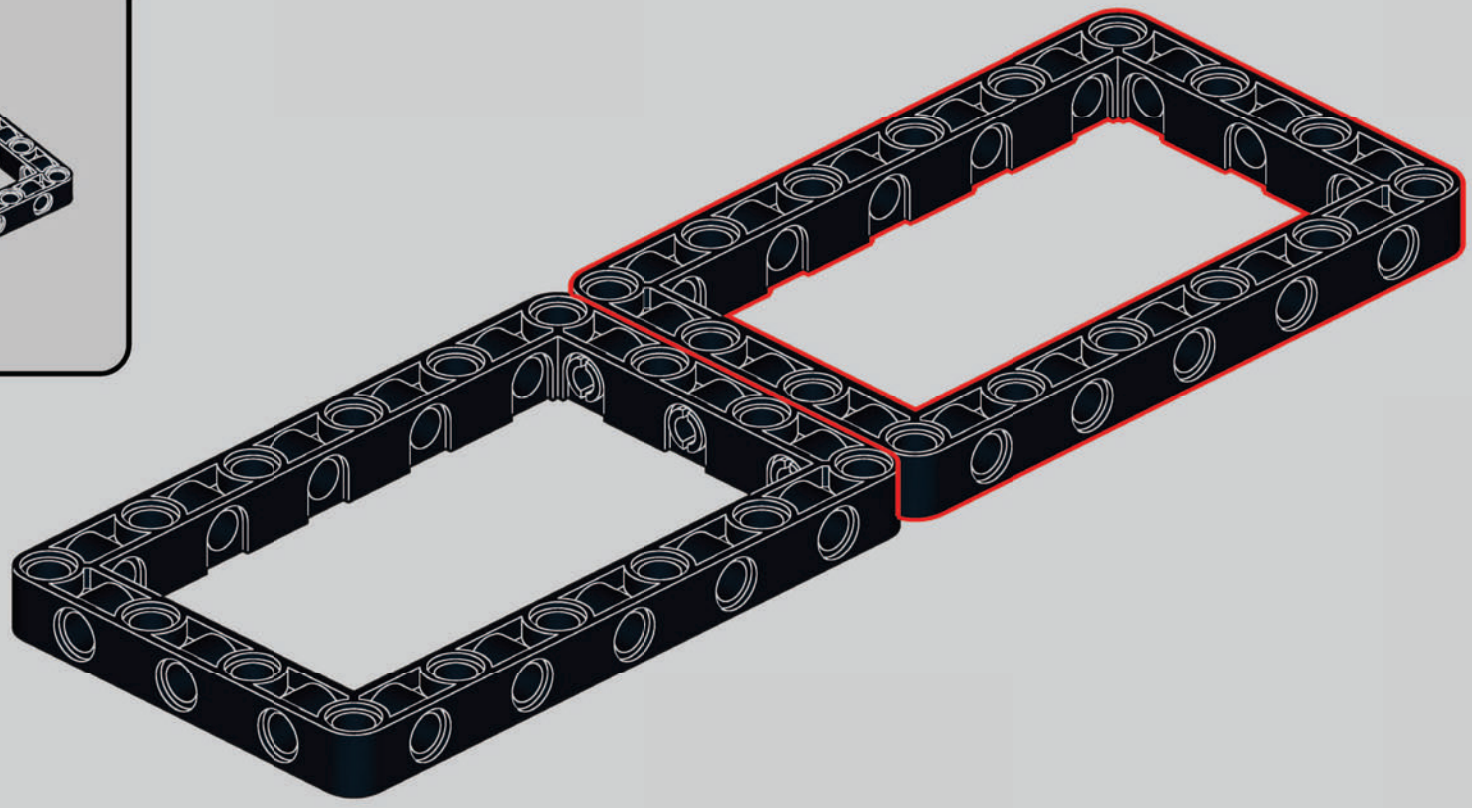



4

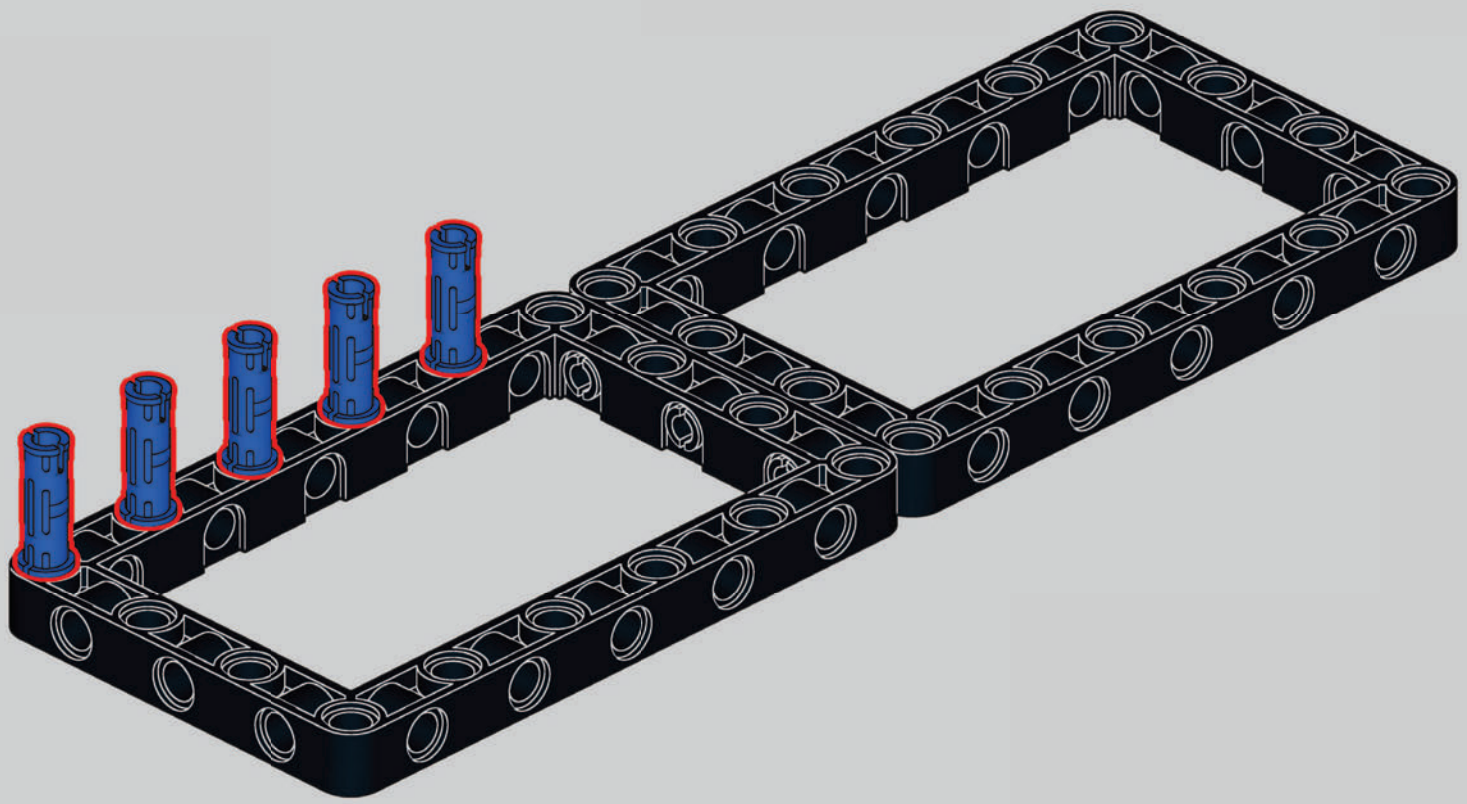



5

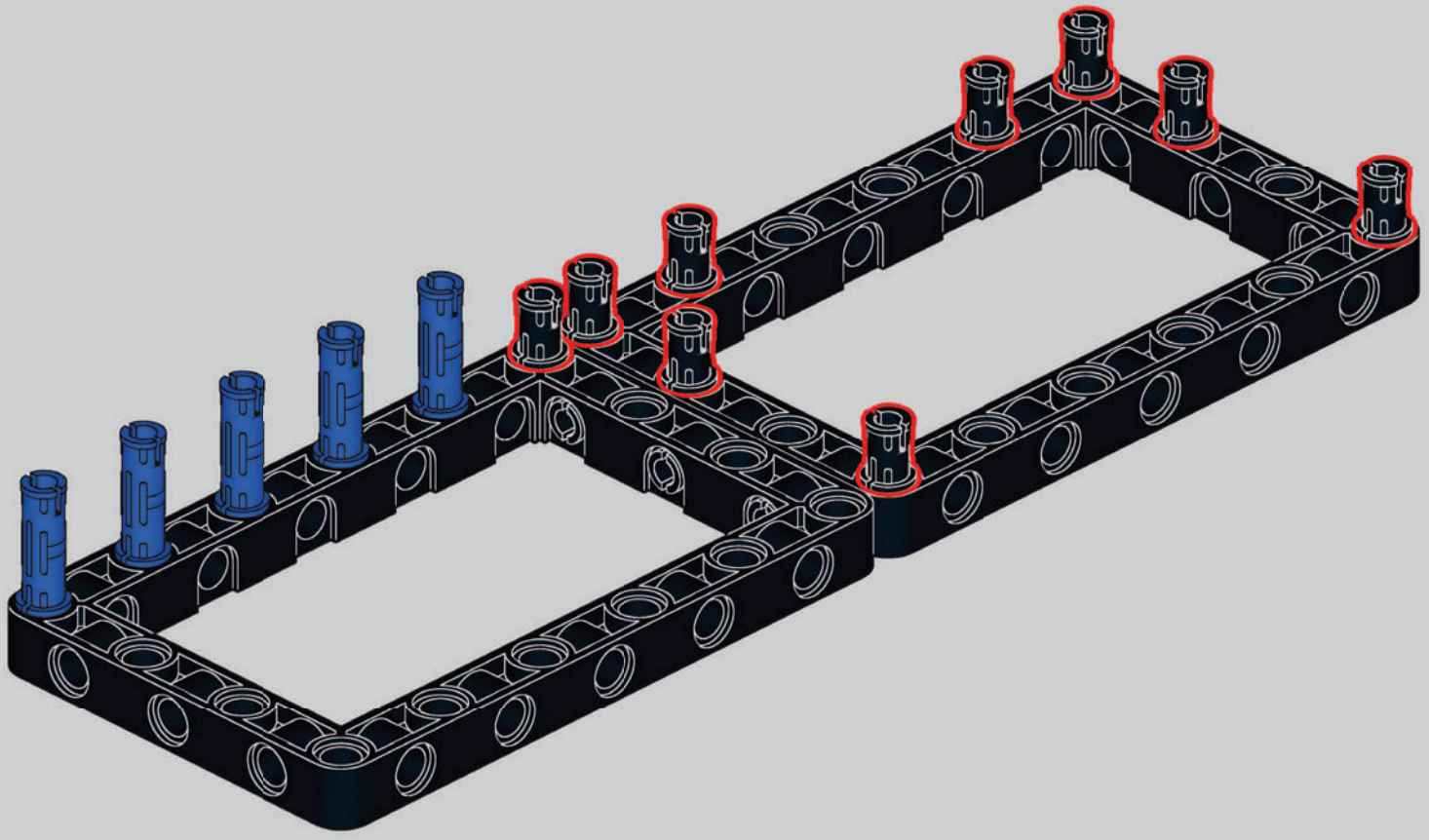

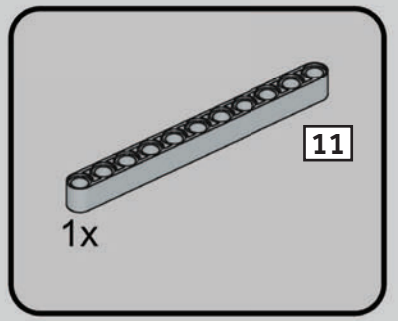

6

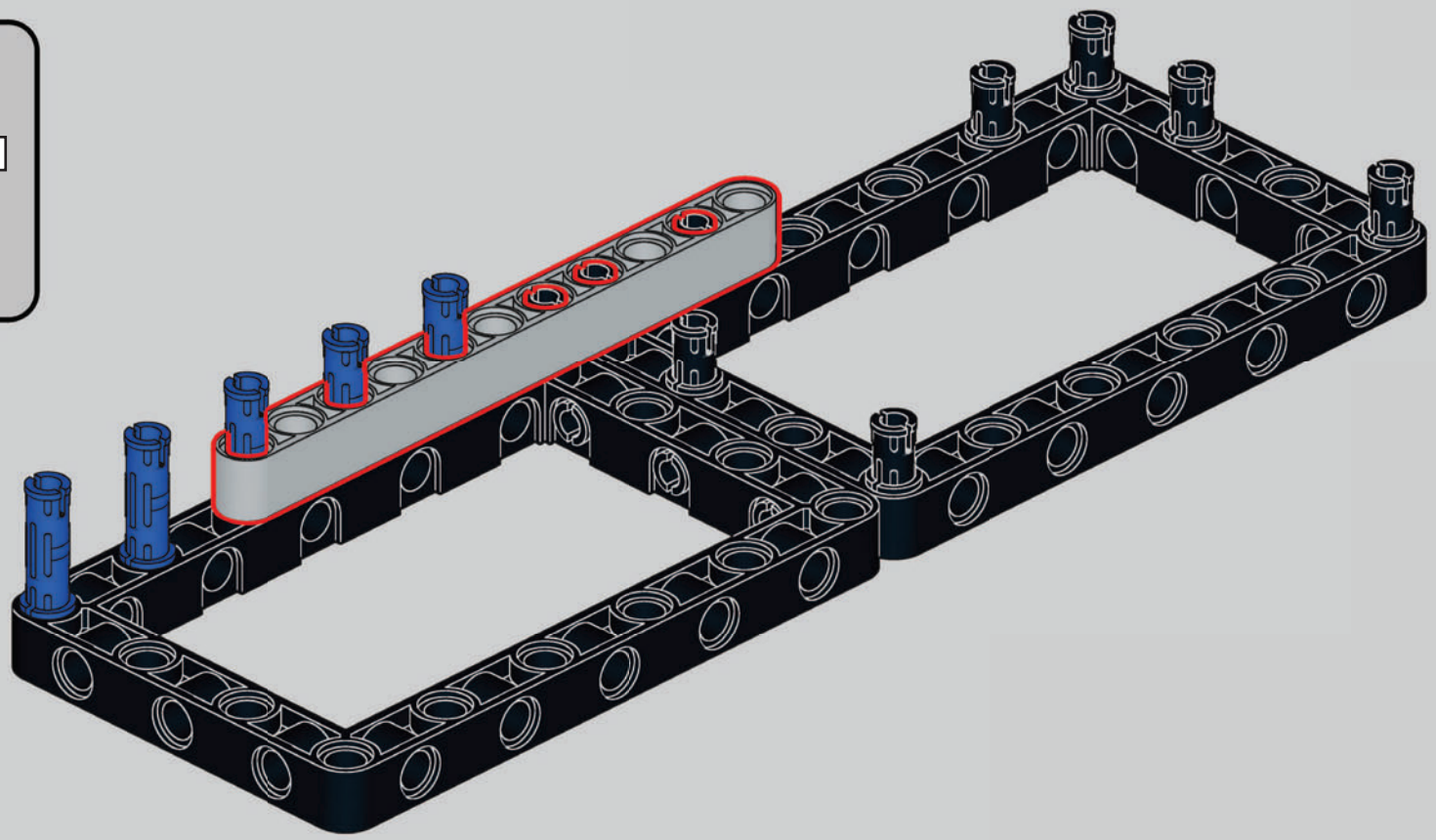

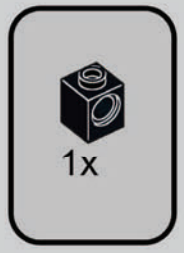

1

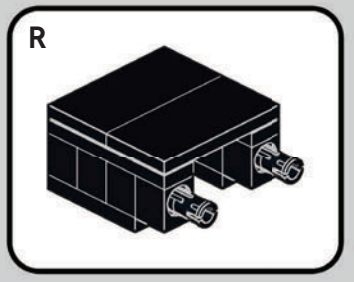

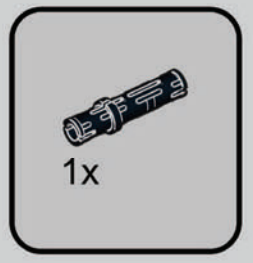

2



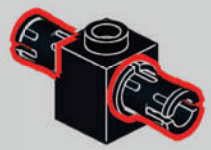

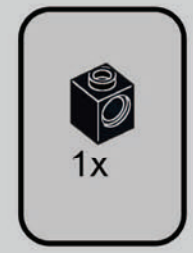

3

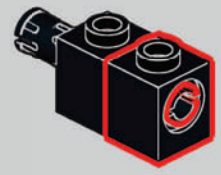

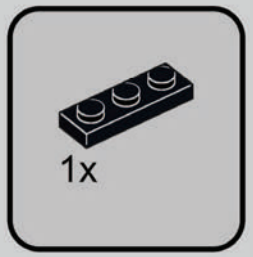

4

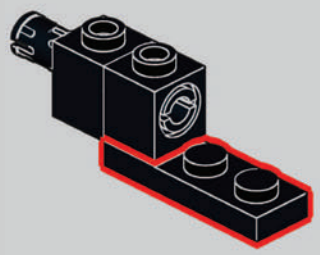

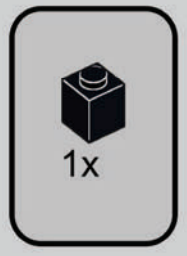

5

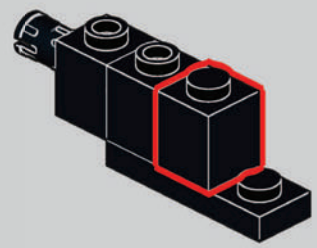

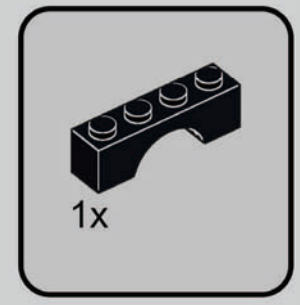

6

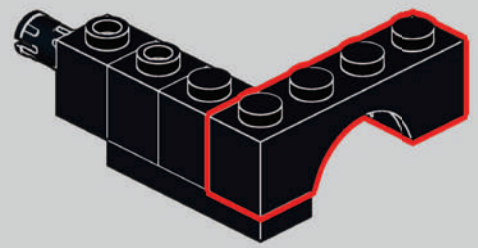

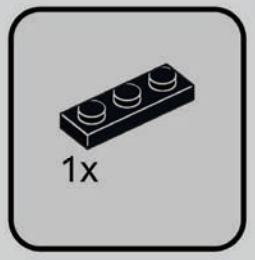

7

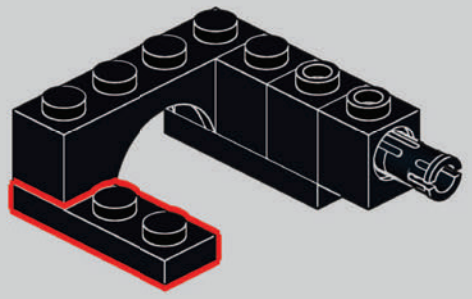

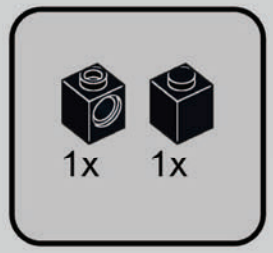

8

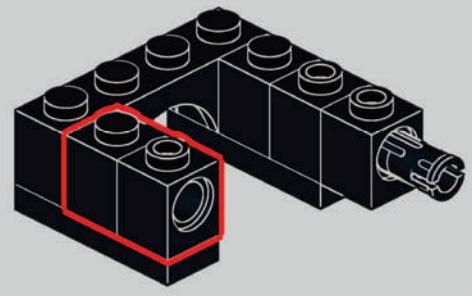



9

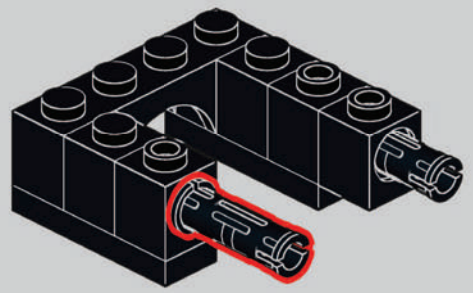

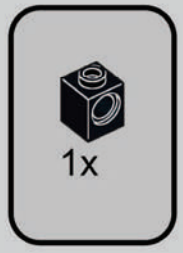

10

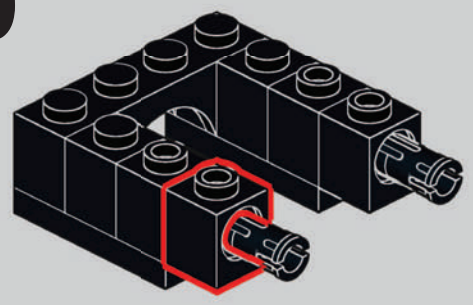

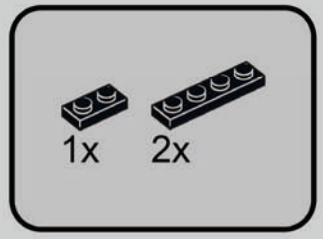

11

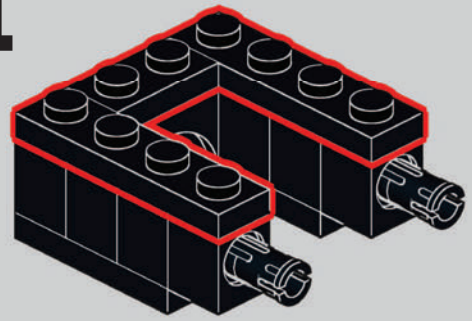



12

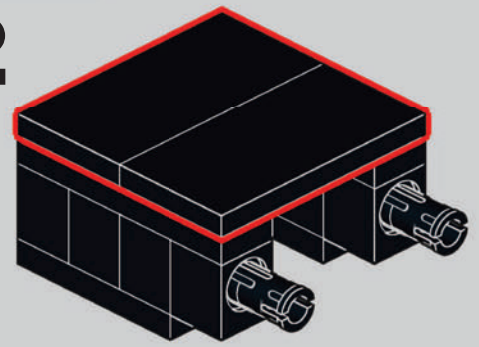

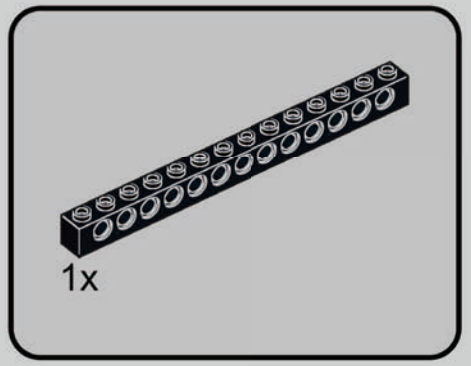

1

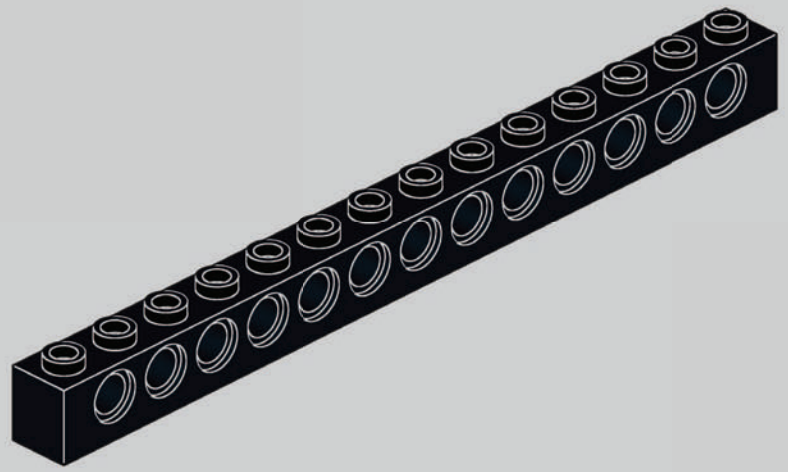

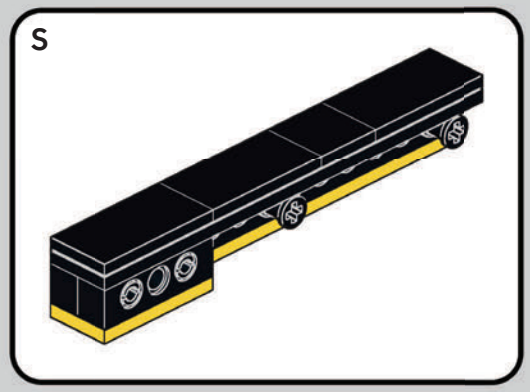



2

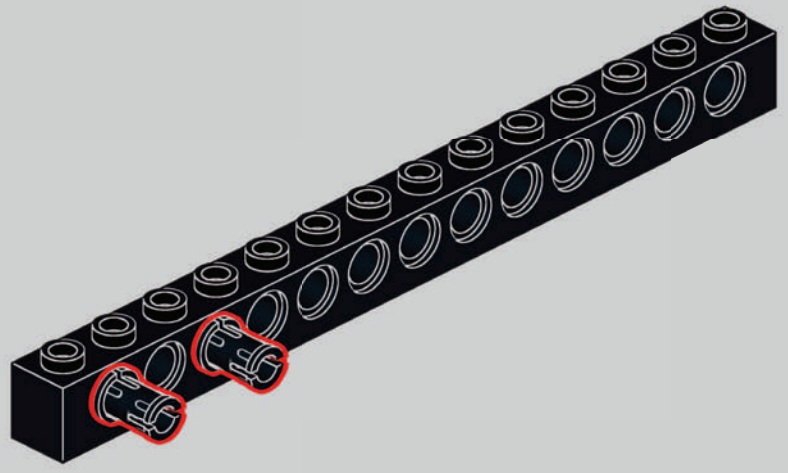

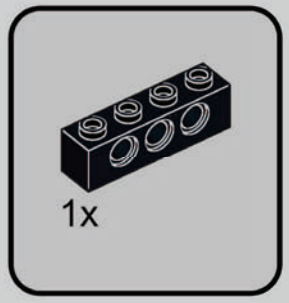

3

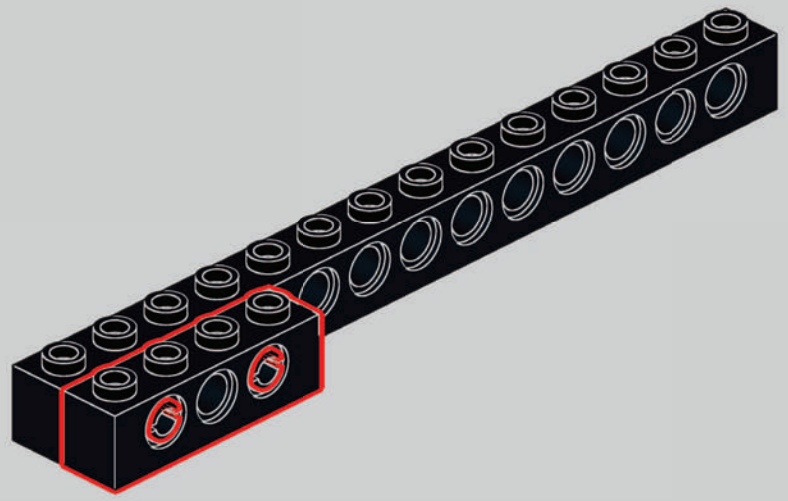

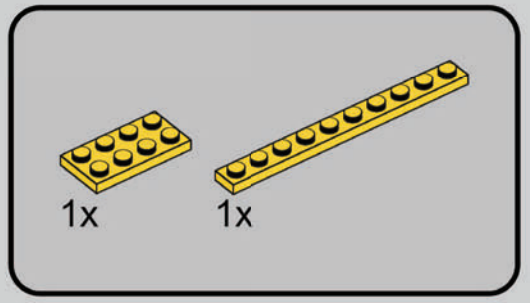

4

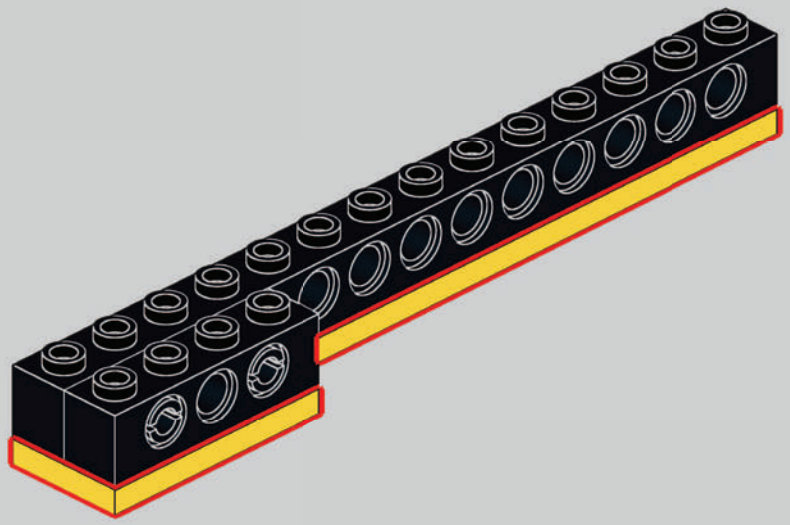

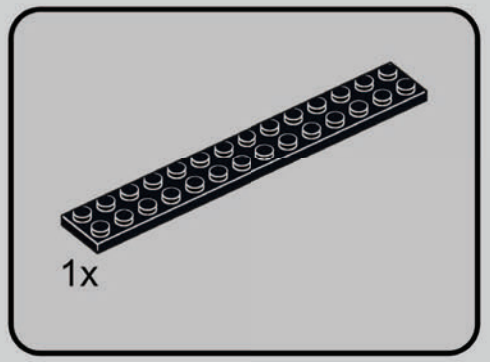

5

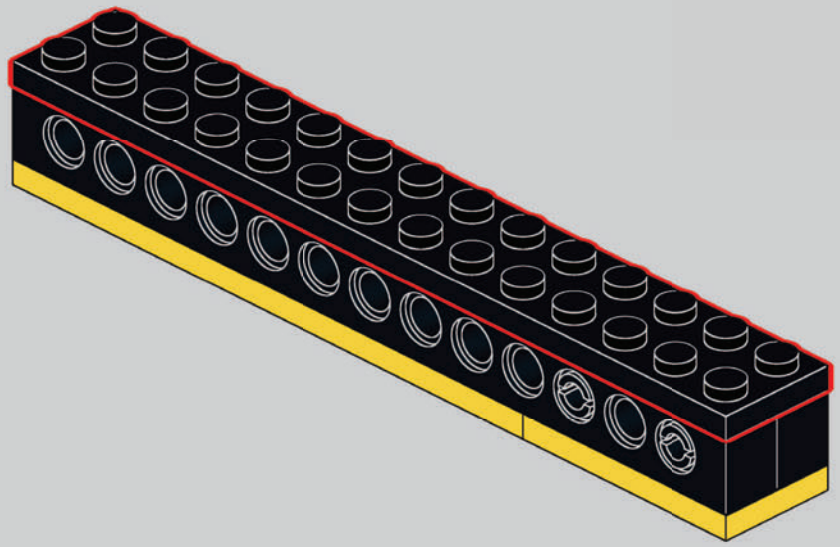

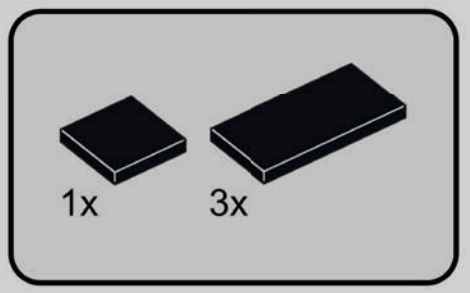

6

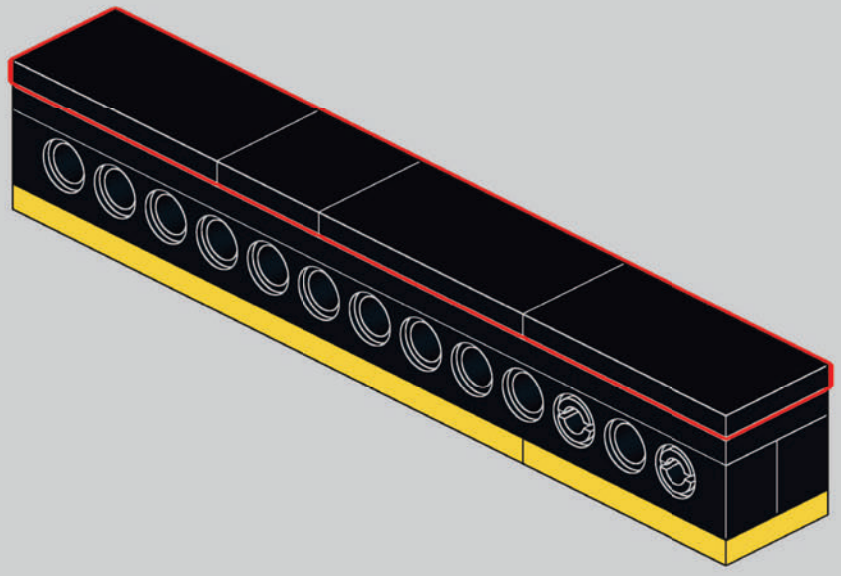



7

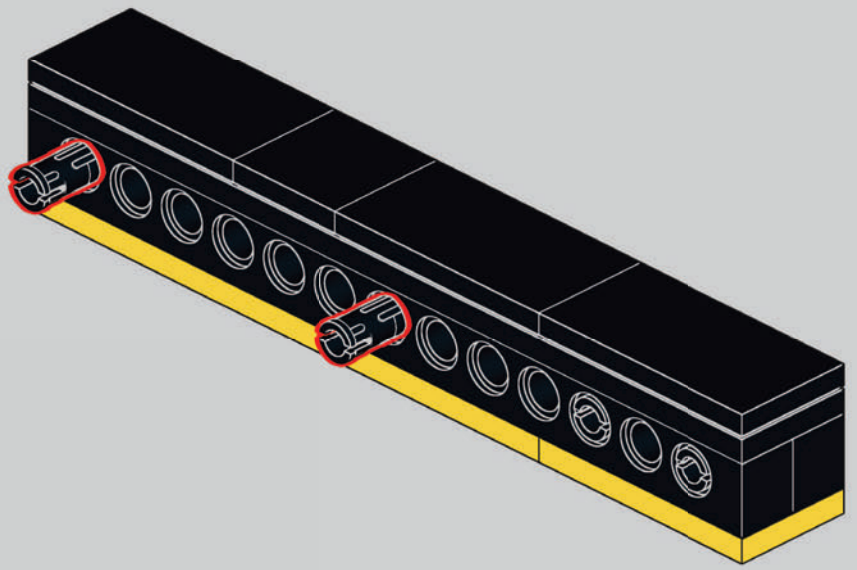

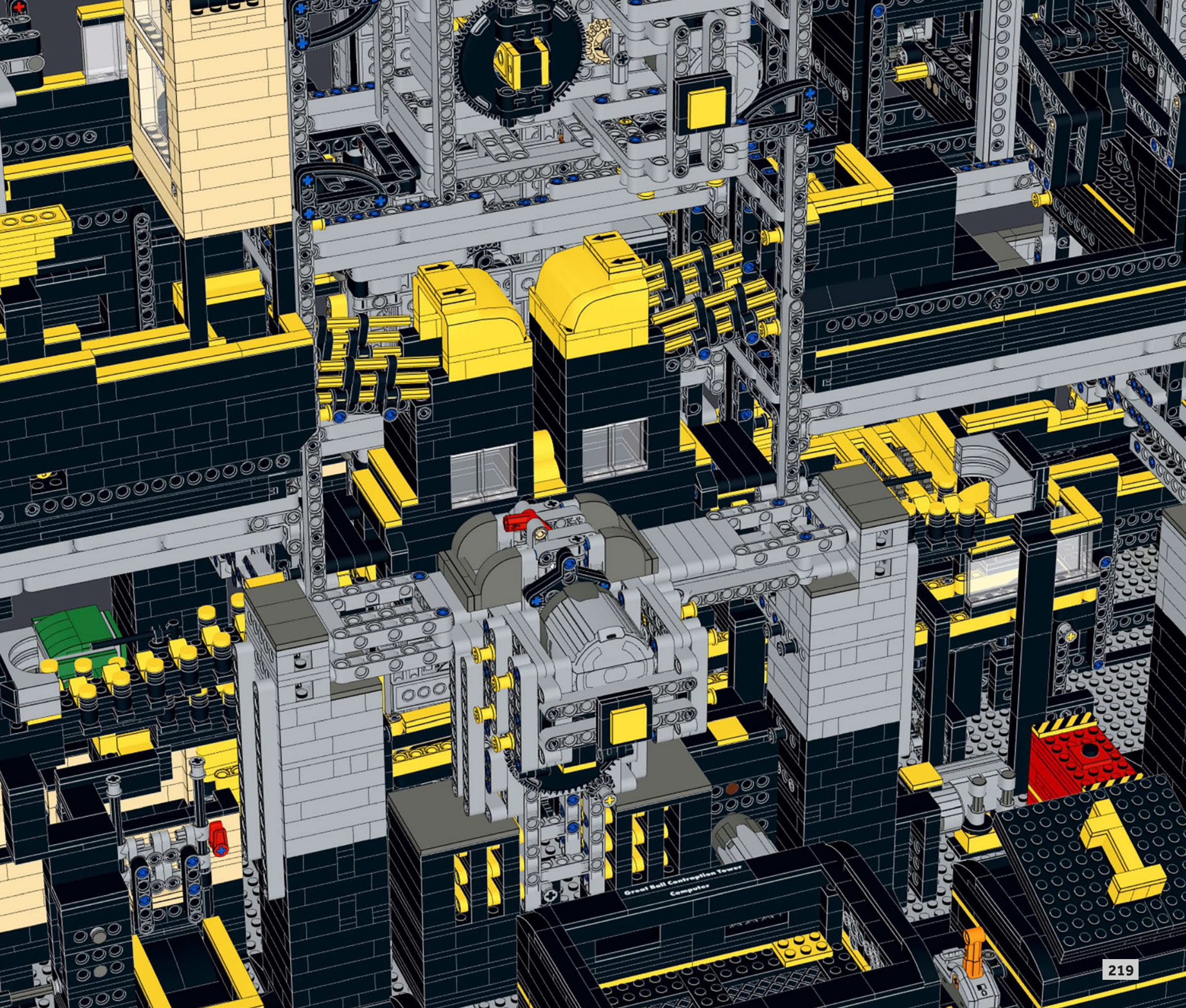
Great Ball Contraption Tower
Computer

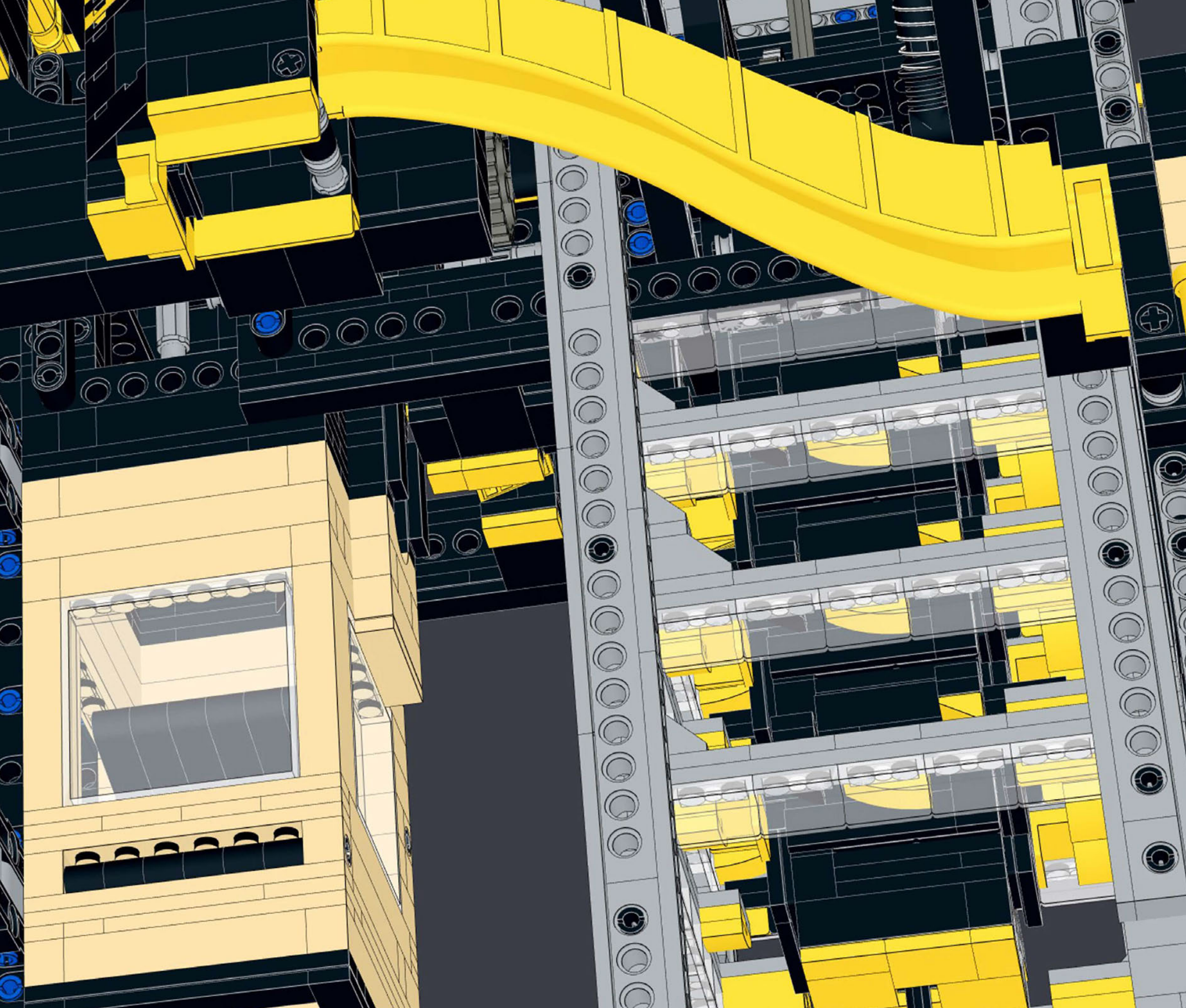

ELECTRONICS

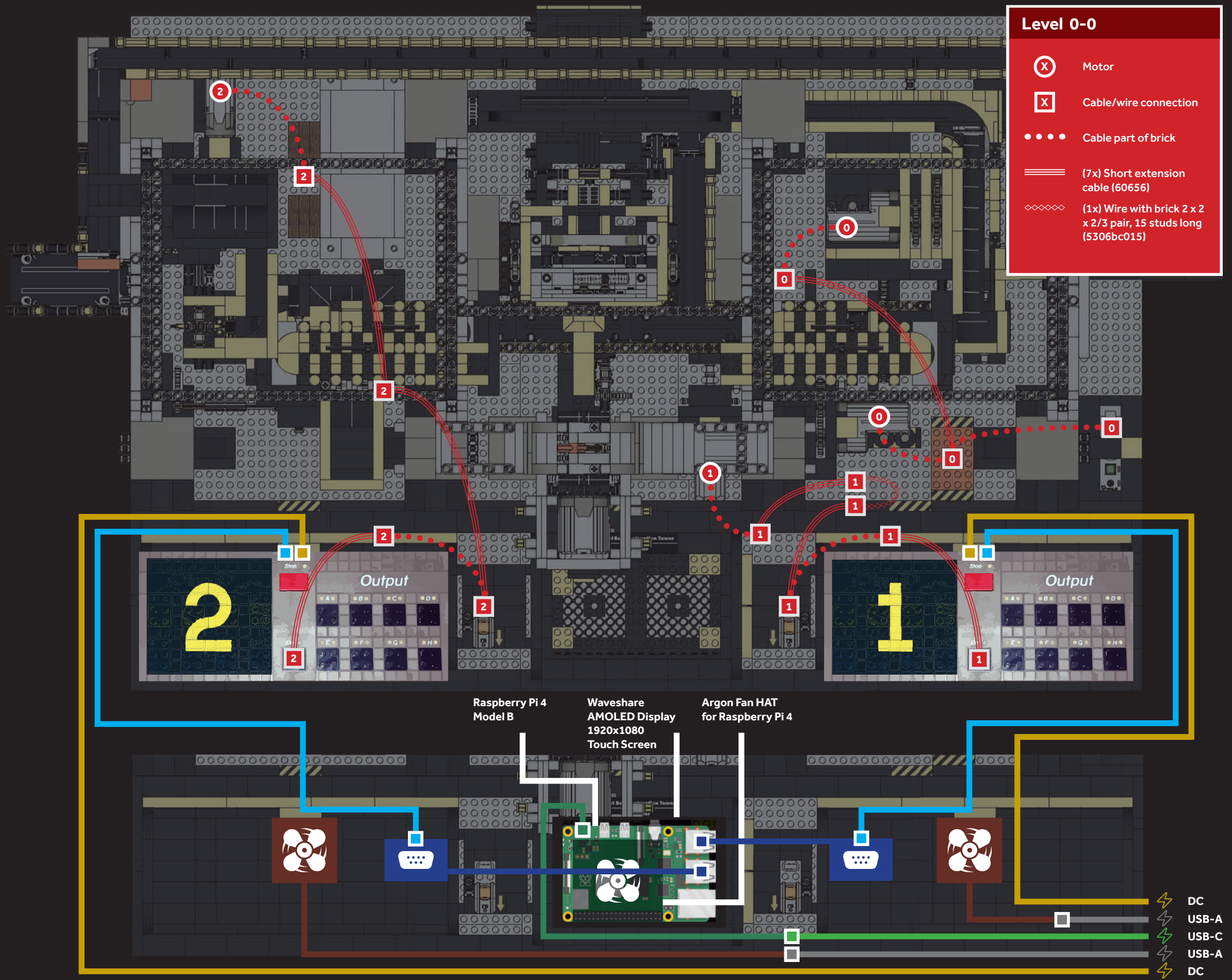
Level 0-0
Motor
Cable/wire connection
Cable part of brick
(7x) Short extension cable (60656)
(1x) Wire with brick 2 x 2 x 2/3 pair, 15 studs long (5306bc015)
Output
Output
Raspberry Pi 4 Model B
Waveshare AMOLED Display 1920x1080 Touch Screen
Argon Fan HAT for Raspberry Pi 4
DC
USB-A
USB-C
USB-A
DC
2x
C2G 52183 Serial RS232 DB9 Null Modem Cable
2x
Plugable USB to Serial Adapter, Prolific PL2303HX
2x
Noctua NF-A4x10 5V PWN
2x
Noctua USB power adaptor cable
2x
Power Supply 12V DC 2A
Faracent USB-C Extension Cable Short - 1.5ft/0.45m
CanaKit Power Supply with PiSwitch (USB-C)

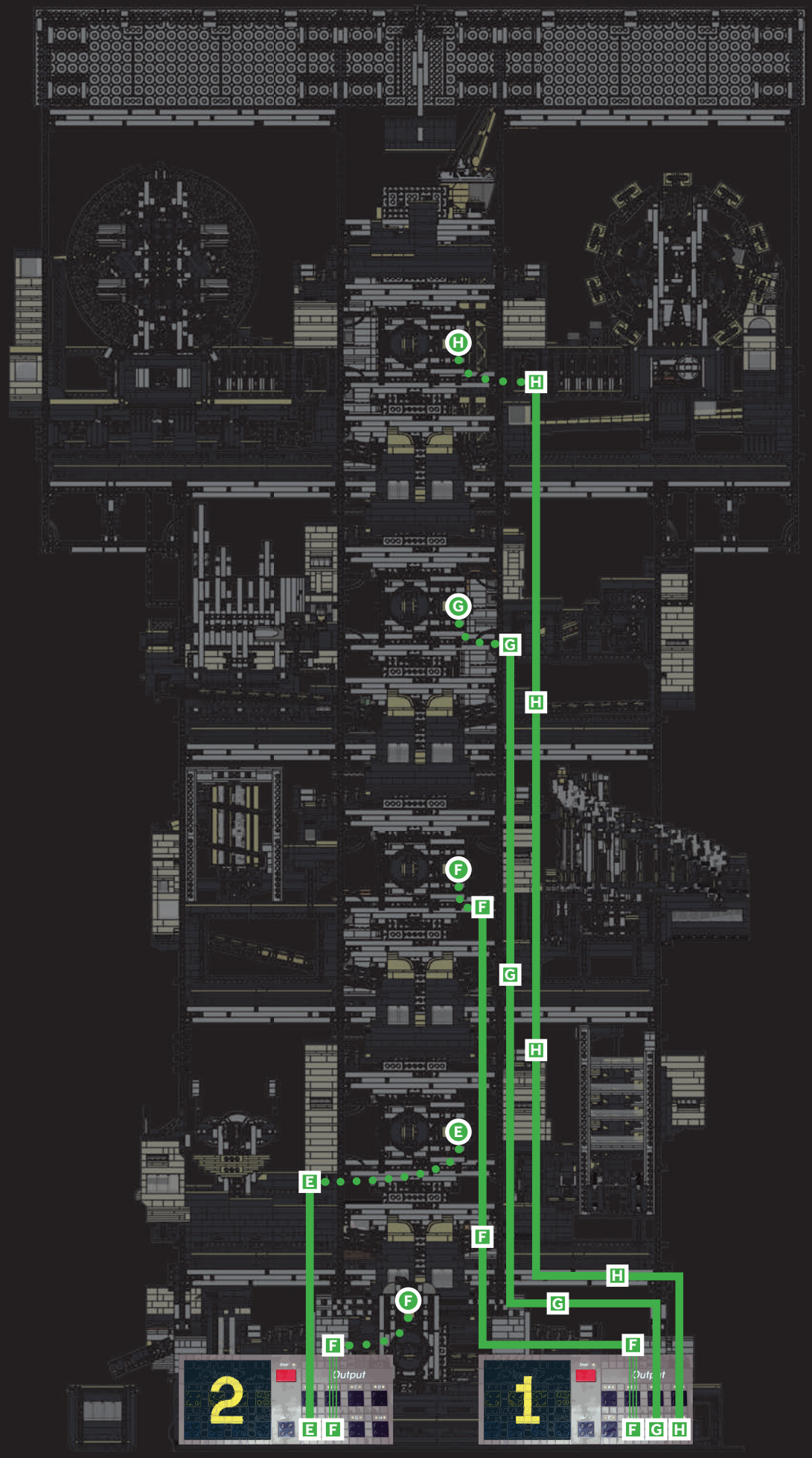

Snake Lift

- Motor
- Cable/wire connection
- Cable part of brick
- (2x) Short extension cable (60656)
- (10x) Long extension cable (58118)

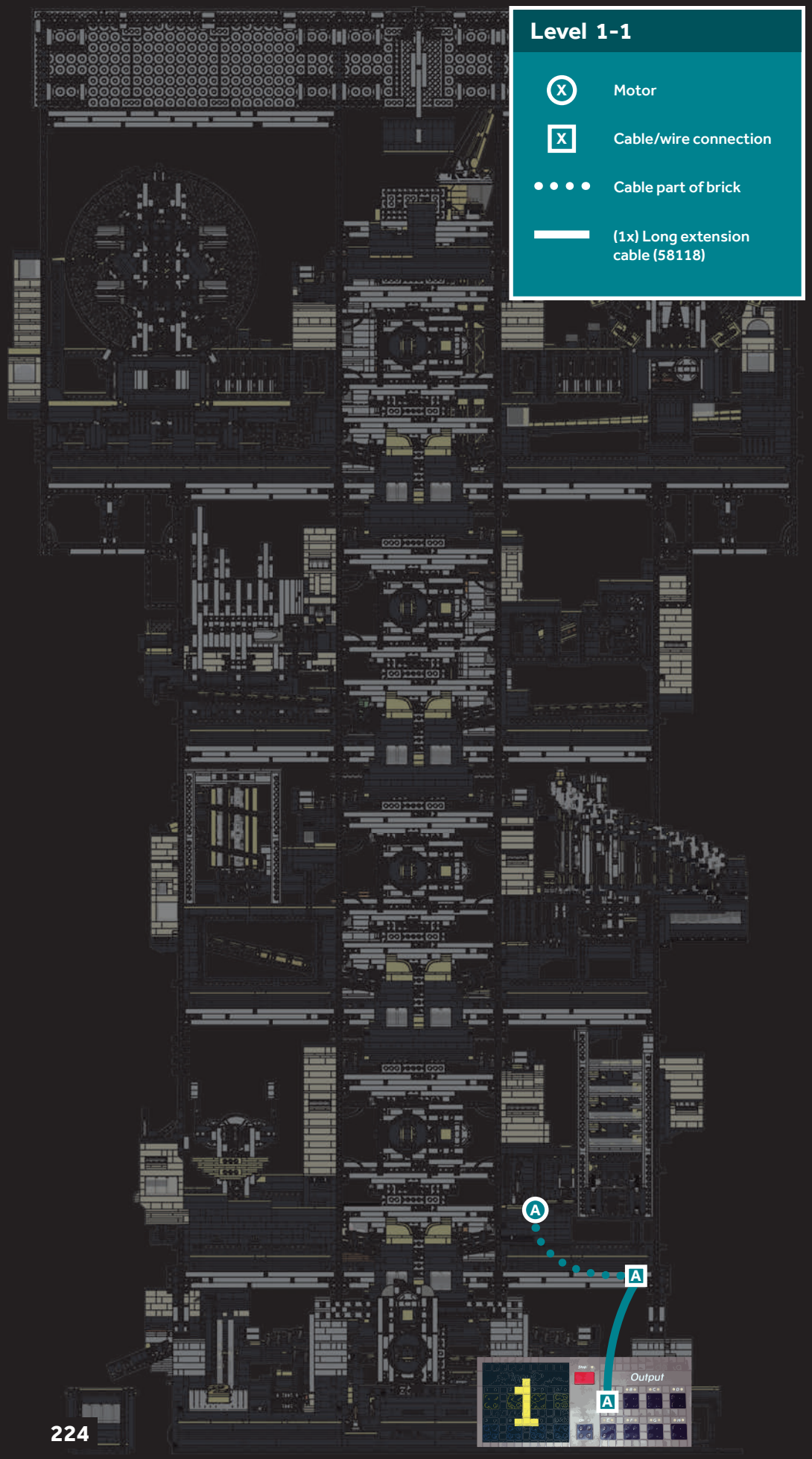
Level 1-1
Motor
Cable/wire connection
Cable part of brick
(1x) Long extension cable (58118)
A
A
A
Output
1

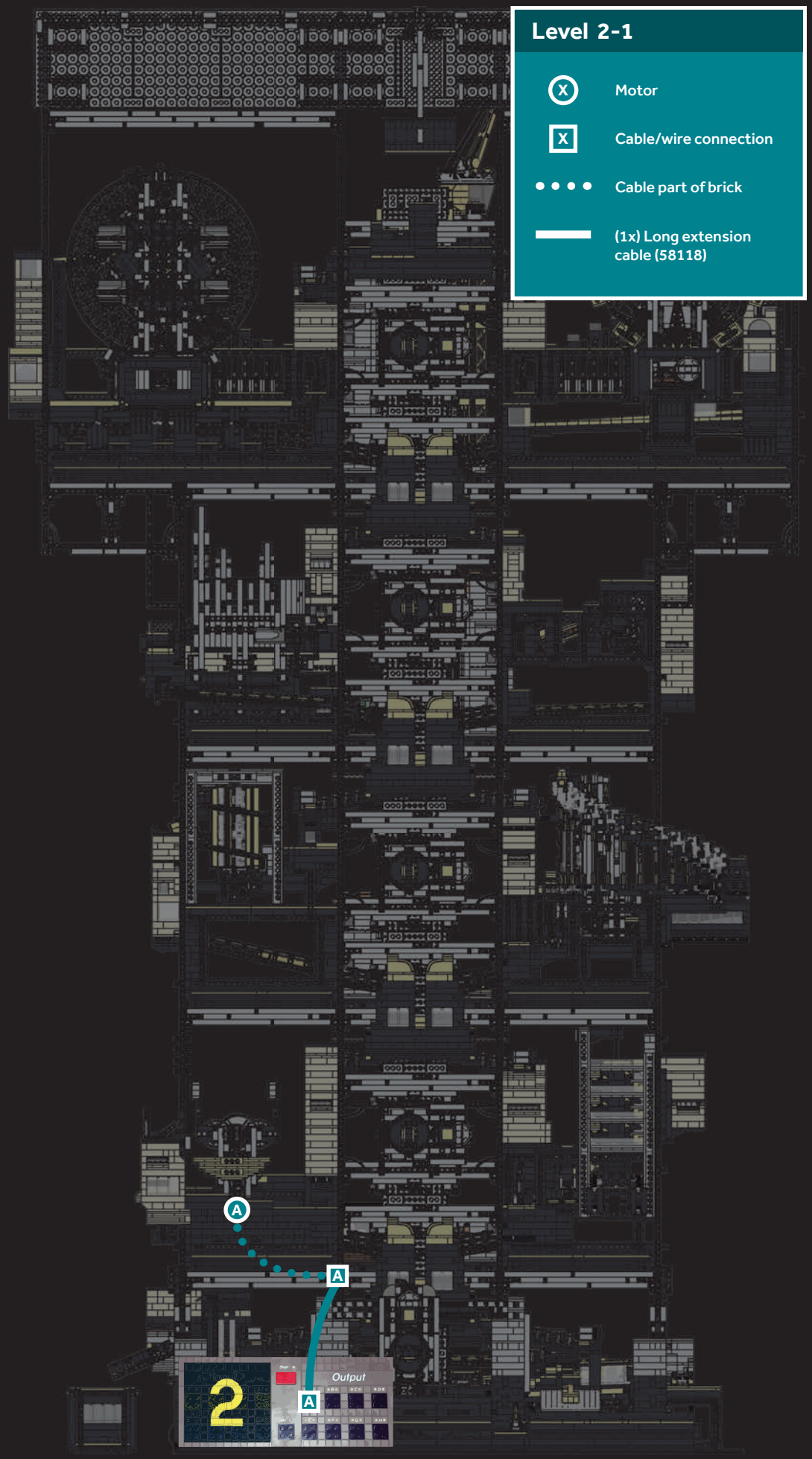
Level 2-1
Motor
Cable/wire connection
Cable part of brick
(1x) Long extension cable (58118)
A
A
A
Output
2

Level 1-2

- Motor
- Cable/wire connection
- Cable part of brick
- (1x) Short extension cable (60656)
- (1x) Long extension cable (58118)

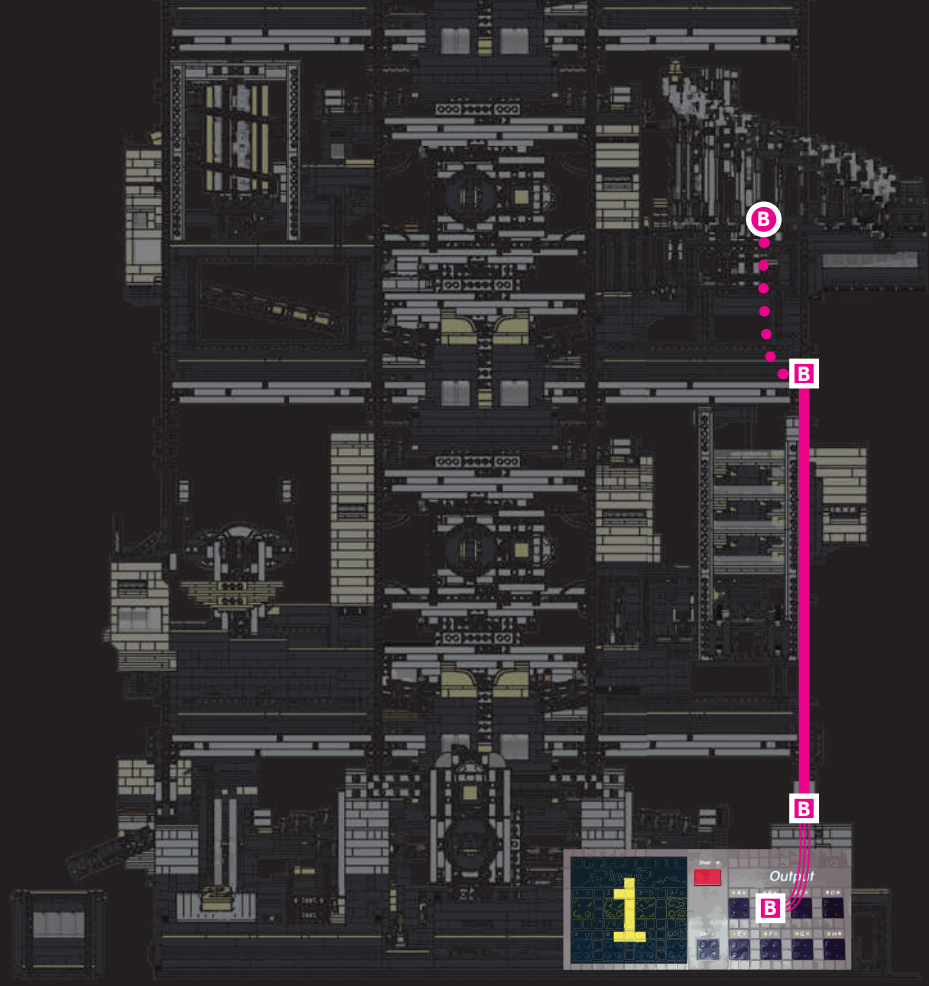

Level 2-2

- Motor
- Cable/wire connection
- Cable part of brick
- (2x) Long extension cable (58118)

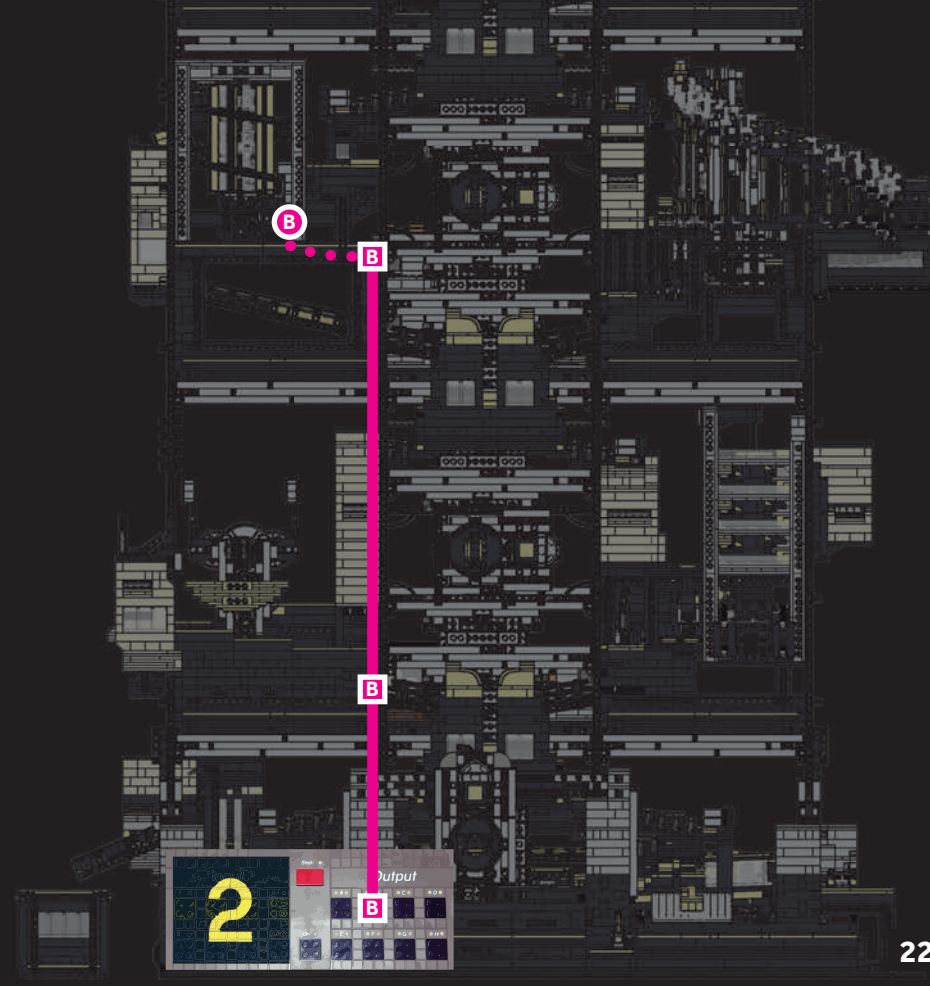


Level 1-3
Motor
Cable/wire connection
Cable part of brick
(1x) Short extension cable (60656)
(2x) Long extension cable (58118)
C
C
C
C
Output

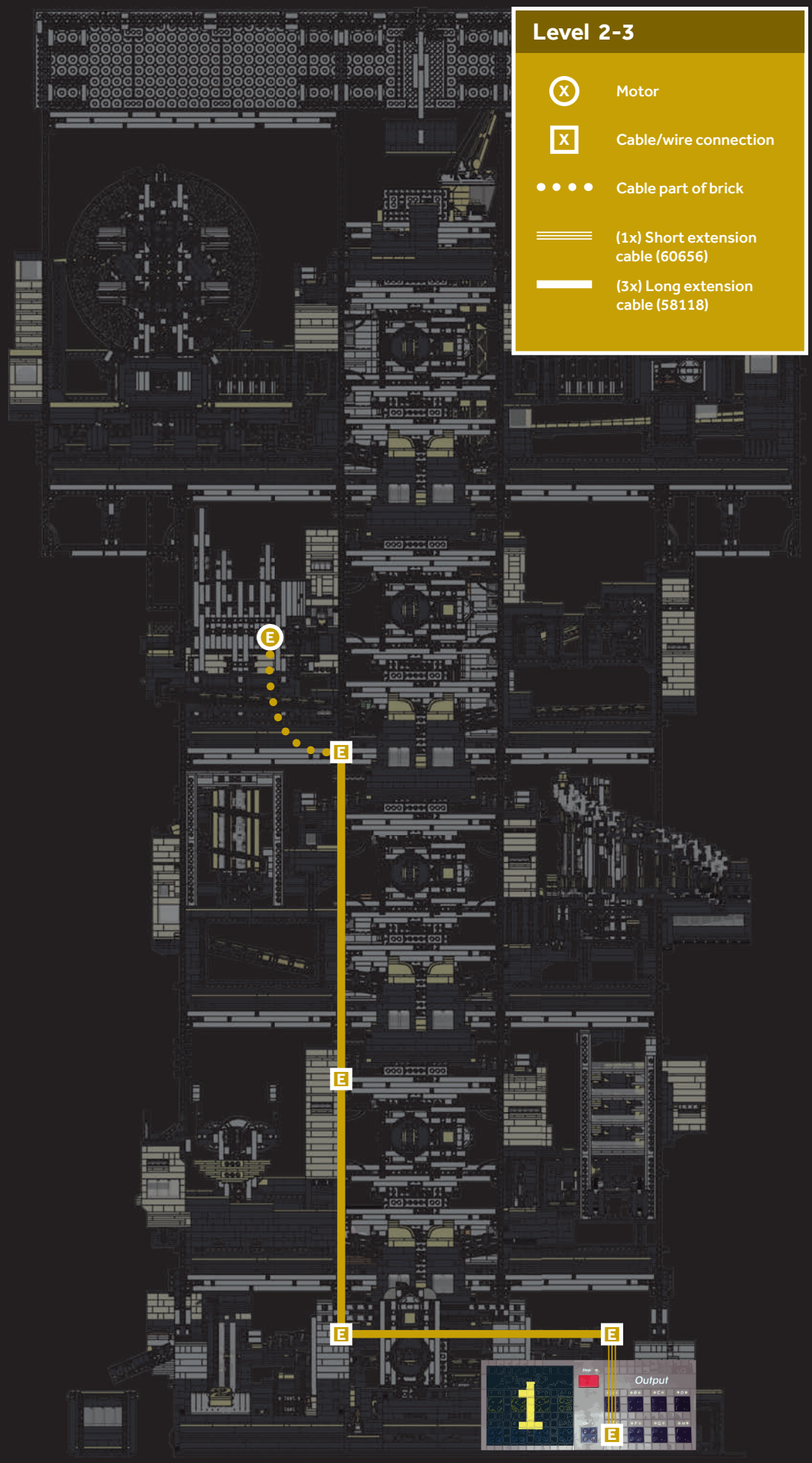
Level 2-3
Motor
Cable/wire connection
Cable part of brick
(1x) Short extension cable (60656)
(3x) Long extension cable (58118)
E
E
E
E
E
Output

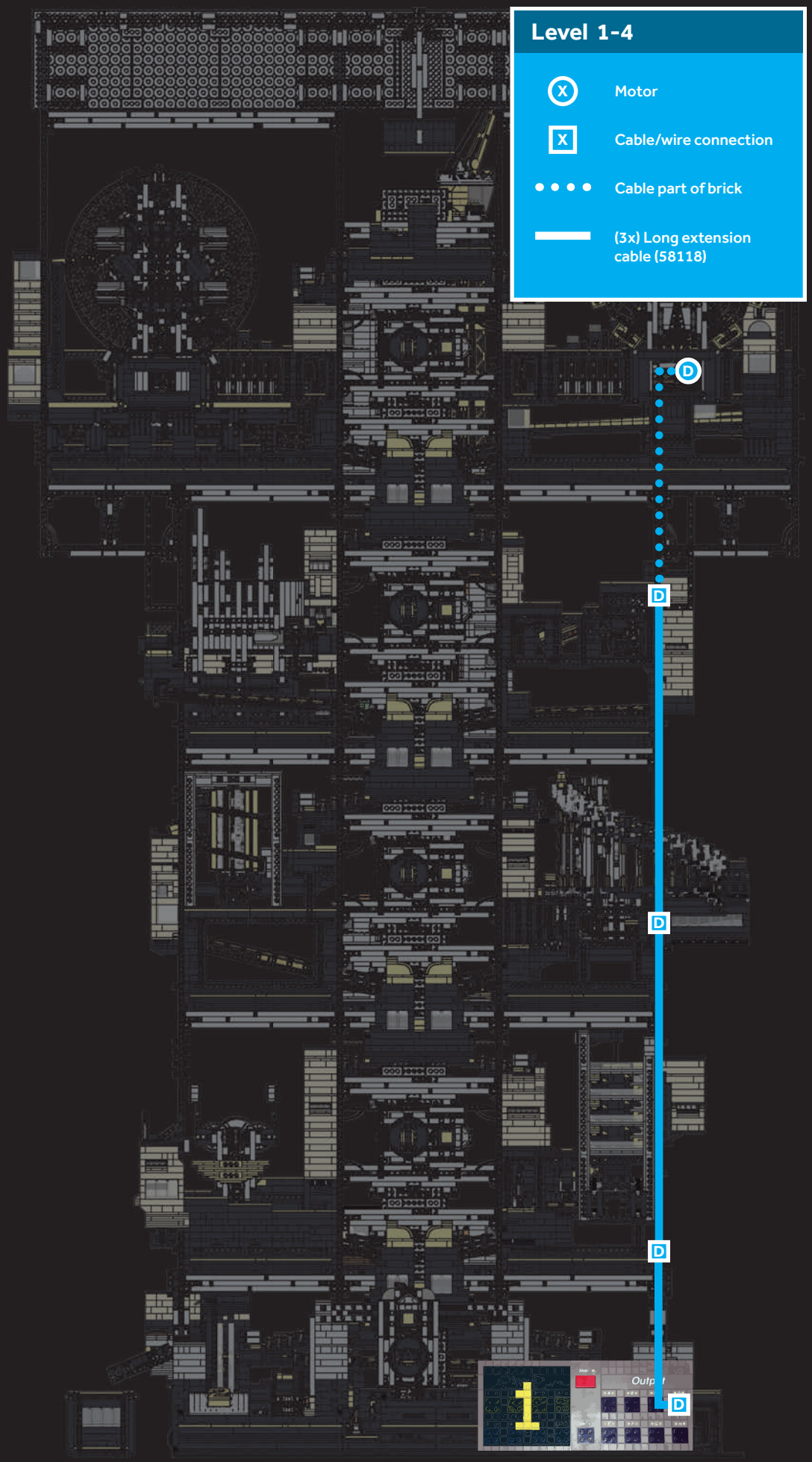
Level 1-4
Motor
Cable/wire connection
Cable part of brick
(3x) Long extension cable (58118)
D
D
D
D
1
Output
D

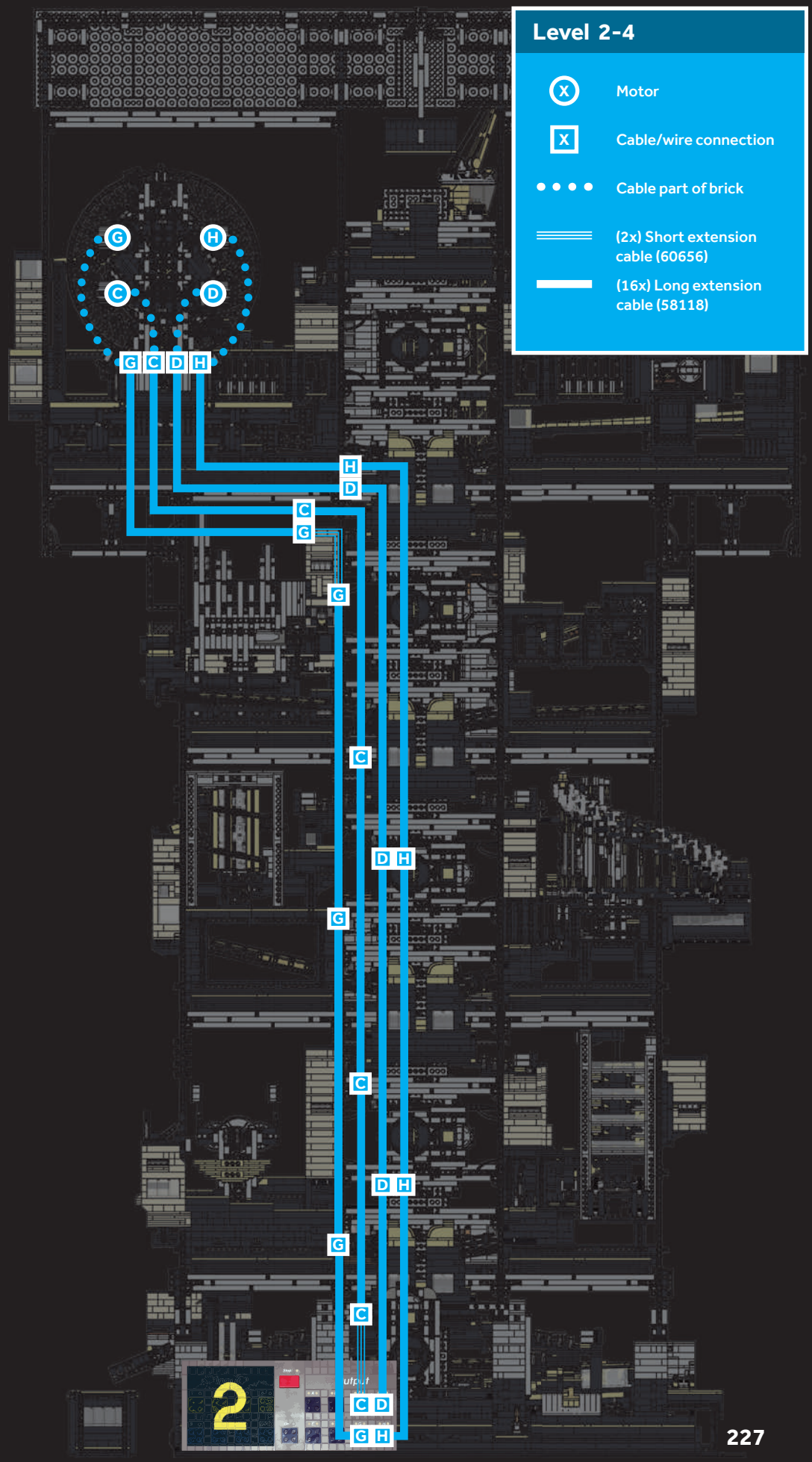
Level 2-4
Motor
Cable/wire connection
Cable part of brick
(2x) Short extension cable (60656)
(16x) Long extension cable (58118)
G
H
C
D
G C D H
H
D
C
G
G
C
D H
G
D H
C
G H
2
Output
C D
G H

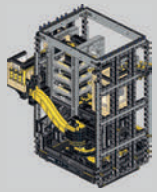

Level 1-1

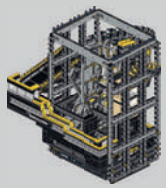

Level 1-2



Level 1-3

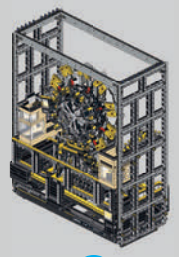

Level 1-4



Level 2-3

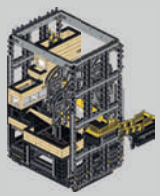

Snake Lift Level 2



Snake Lift Level 3



Snake Lift Level 4

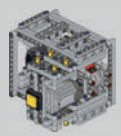

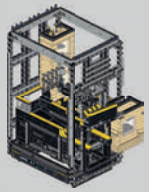

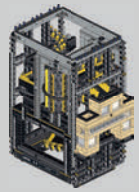

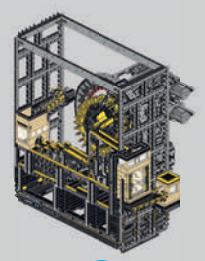

Level 2-1

Level 2-2

Level 2-4

A 5 ON

B 5 ON

C 8 ON

D 8 ON

E 8 ON

F 8 ON

G 8 ON

H 8 ON

2

Snake Lift Level 1



Snake Lift Level 0

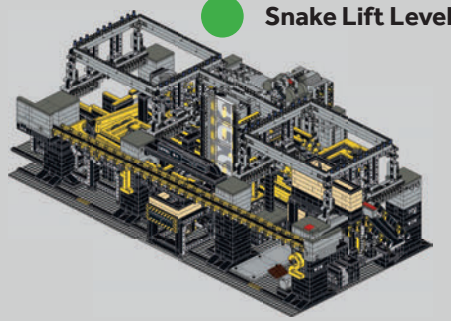

Control Lab IO
https://www.controllab.io

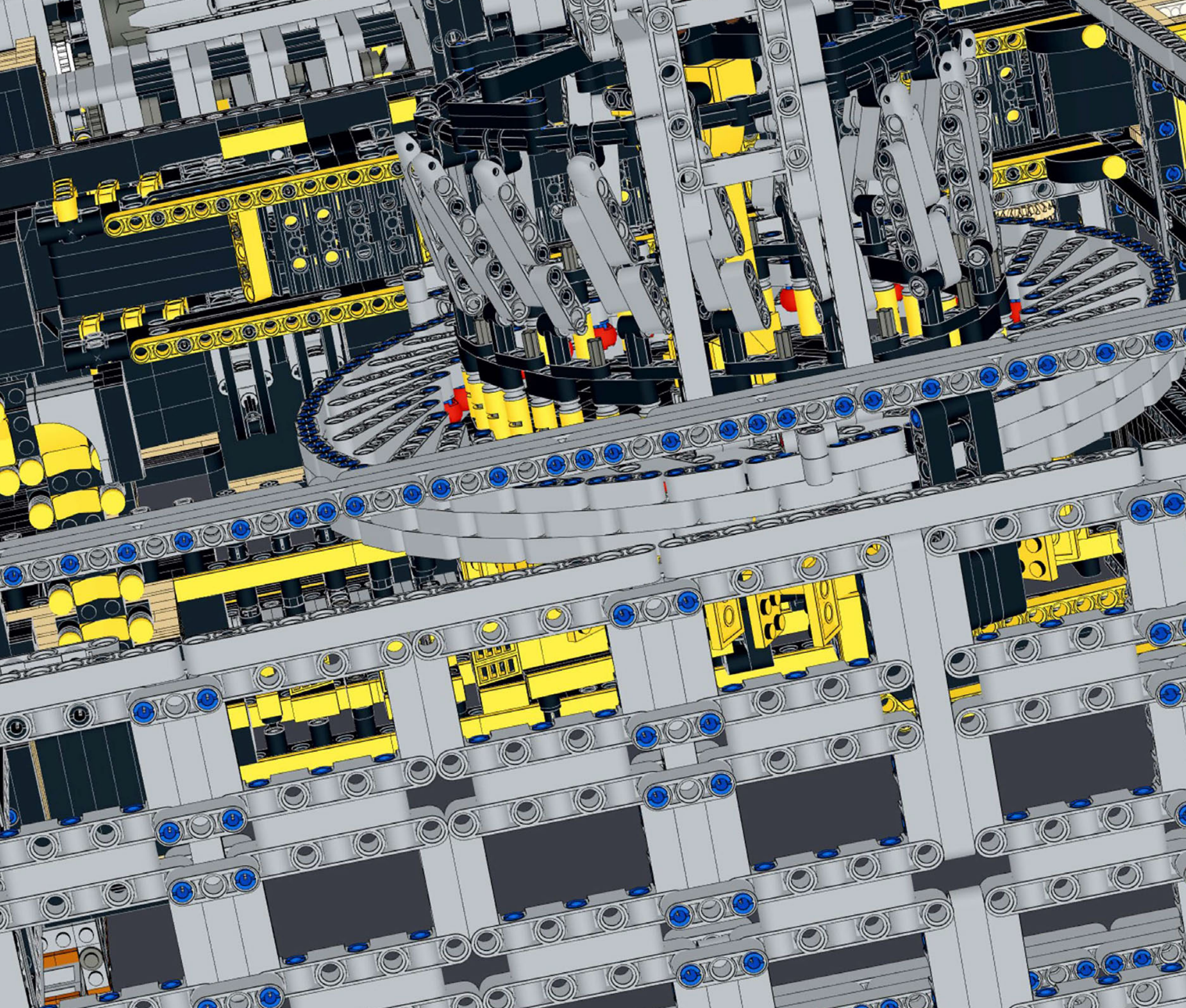

PARTS LIST

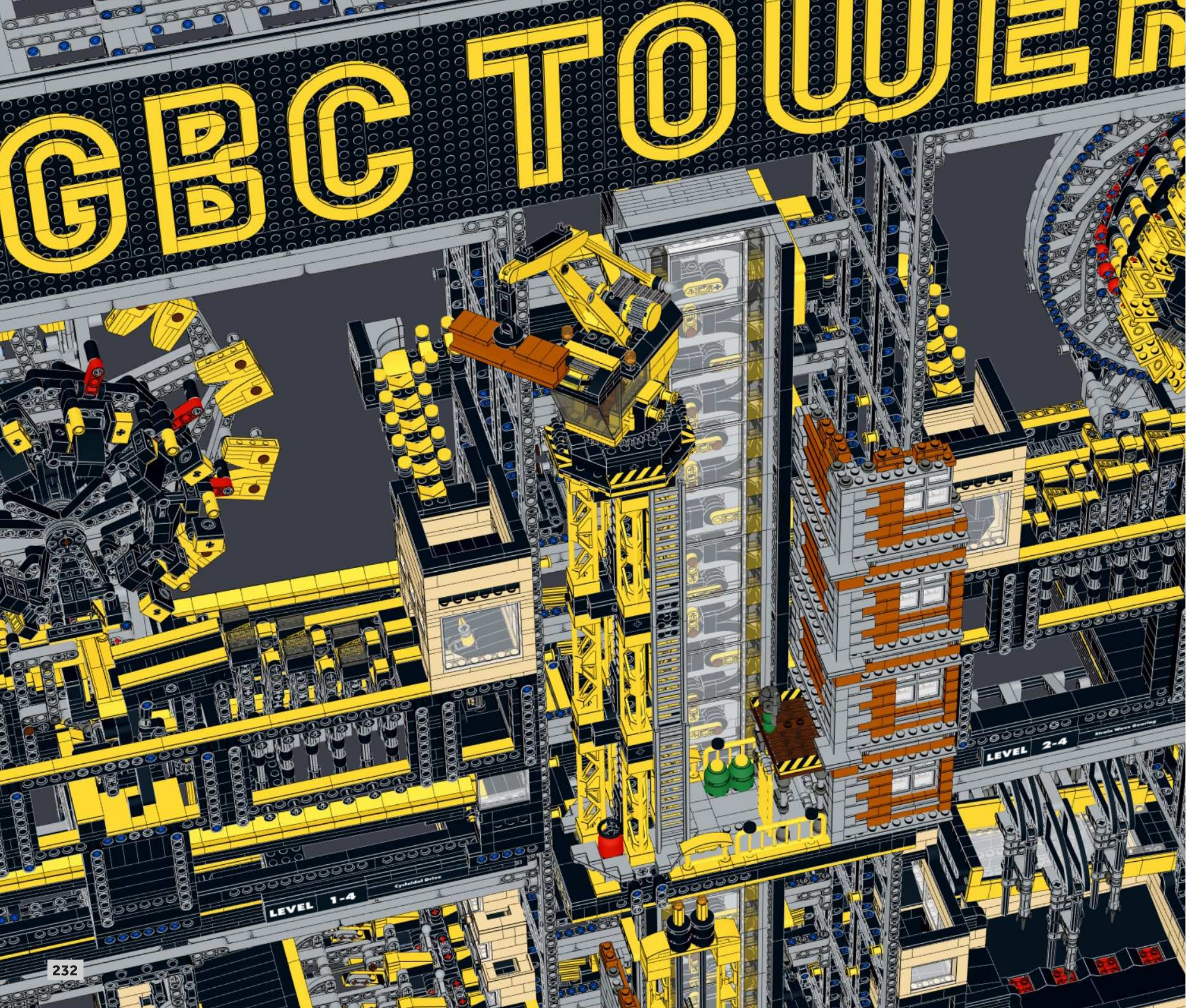
CBC TOWER
LEVEL 1-4
Cycloidal Drive
LEVEL 2-4
Strain Wave Gearing


2
3x
2x
62x
43x
2x
21x
20x
2x
3x
264x
14x
12x
154x
1x
5x
566x
6x
38x
4x
2x
11x
1x
17x
17x
8x
30x
149x
28x
5x
46x
168x
19x
50x
1x
9x
39x
53x
259x
114x
163x
7x
6x
2x
35x
70x
114x
4x
1x
1x
11x
378x
243x
5113x
163x
122x
2x
1x
1x
29x
106x
449x
138x
15x
11x
16x
30x
1x
1x
4x
14x
60x
4x
1x
1x
20x
6x
1x
1x
3x
2x
36x
2x
15x
5x
491x
15x
43x
184x
4x
2x
1x
79x
2x
50x
92x
6x
13x
9x
1x
1x
9x
219x
2x
1x
4x
8x
2x
1x
16x
9x
108x
48x
137x
132x
18x
158x
29x
2x
1x
1x
122x
5x

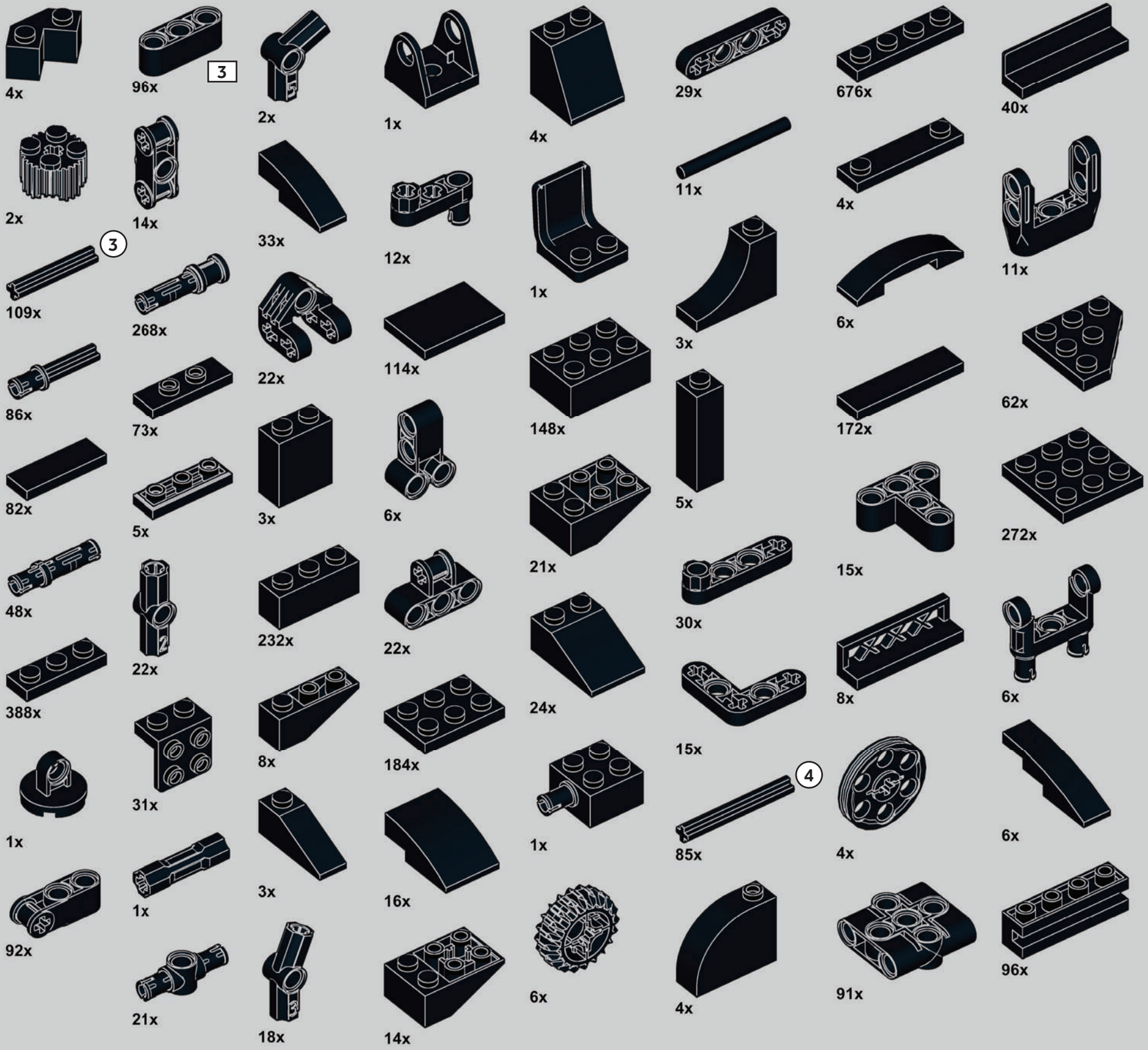
4x
96x
3
2x
1x
4x
29x
676x
40x
2x
14x
33x
12x
1x
11x
4x
11x
3
109x
268x
22x
114x
3x
6x
86x
73x
148x
172x
62x
82x
5x
3x
6x
5x
272x
48x
22x
232x
22x
21x
15x
30x
388x
8x
184x
24x
8x
6x
1x
31x
1x
4
85x
4x
6x
92x
1x
3x
16x
6x
4x
91x
96x
21x
18x
14x

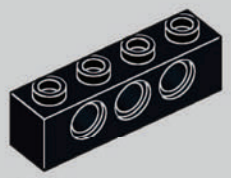
189x

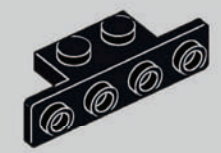
1x

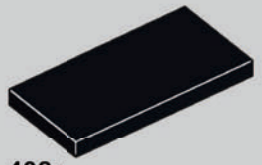
408x


39x

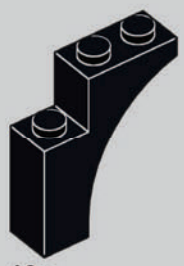
19x

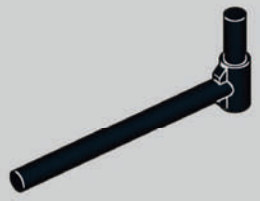
4x


20x


3x


1x

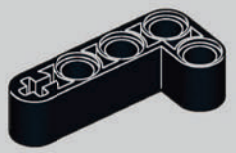
39x

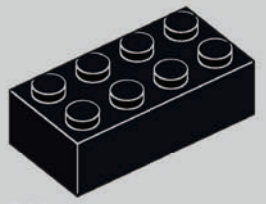
260x


61x

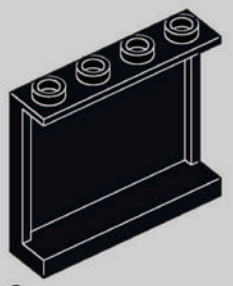
2x


1x


1x

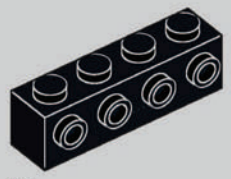
1x

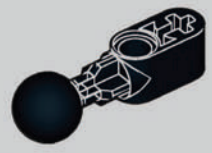
68x


1x


14x

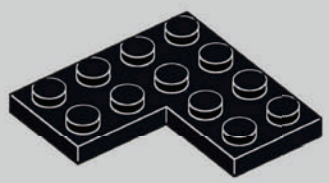
1x

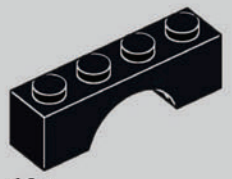
10x


10x

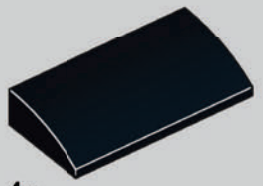
4x


2x


4x


2x


2x

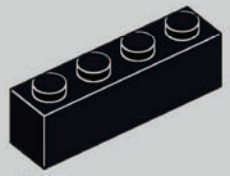
440x

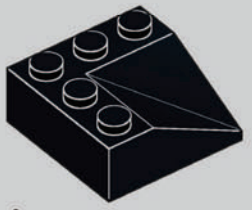
4x

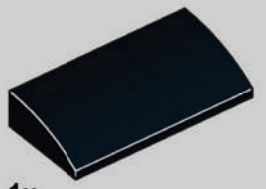
1x


124x


111x


33x


1x

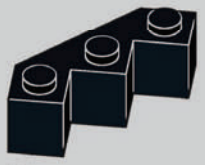
10x

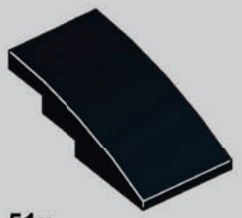
51x


1x


16x


4x


20x

1x

401x

3x

19x

164x

19x

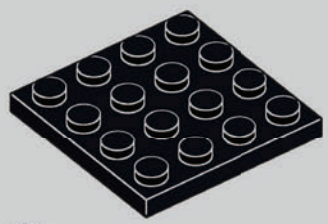

55x

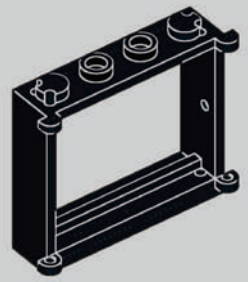

2x

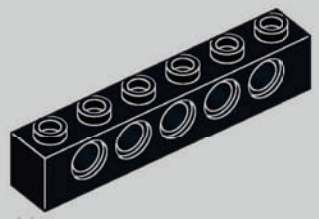

135x

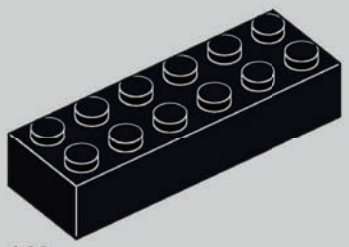

119x

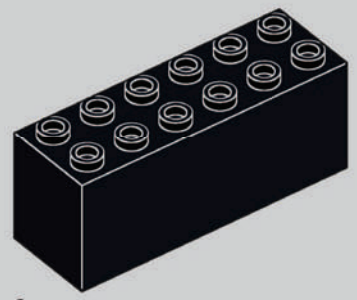

6x

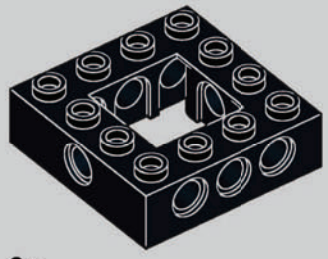

2x



88x

6

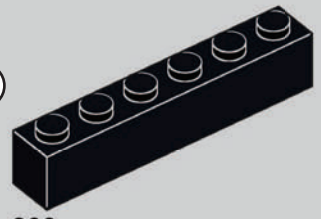

300x



2x



8x

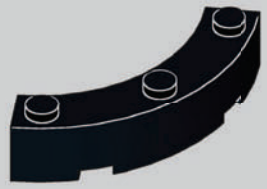

4x



115x

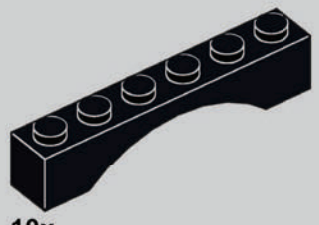

10x

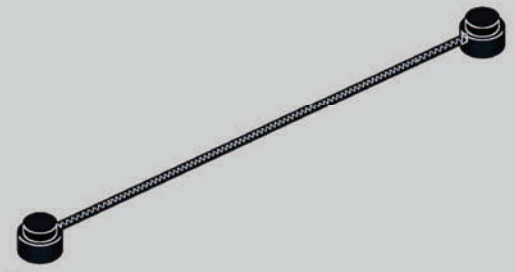

2x

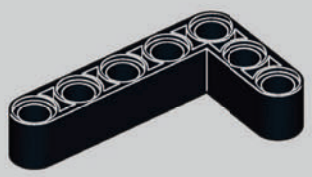

51x

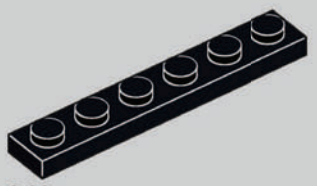

348x



8x



37x



7

206x

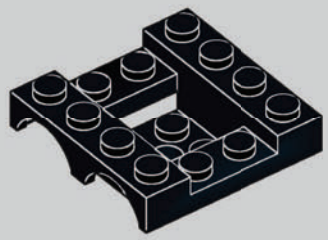

1x



1x

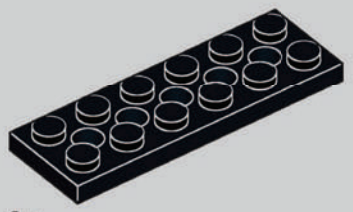

8x

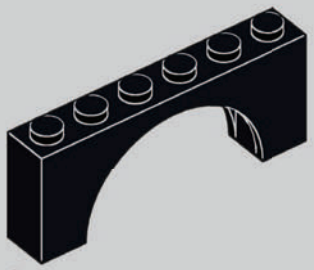

6x

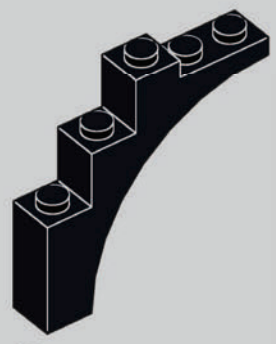

12x



32x

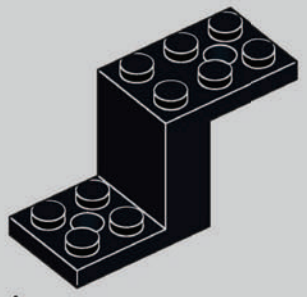

1x

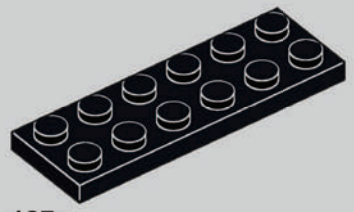

187x



61x

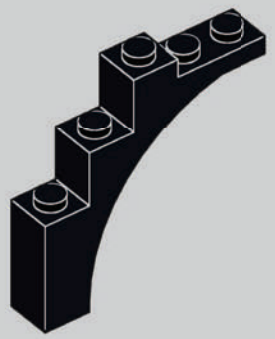
8x


4x


35x

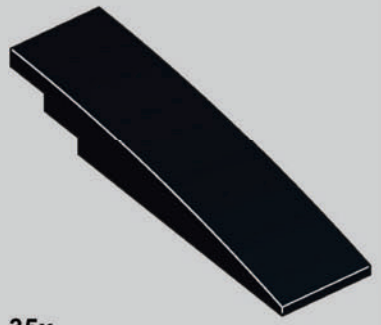
35x

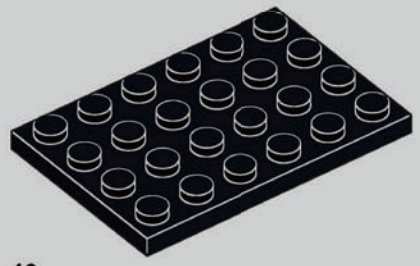
49x


4x

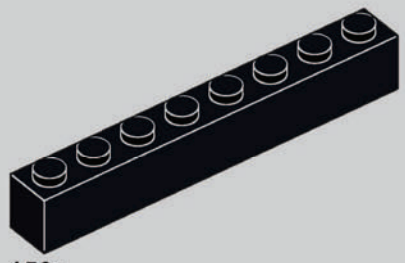
150x

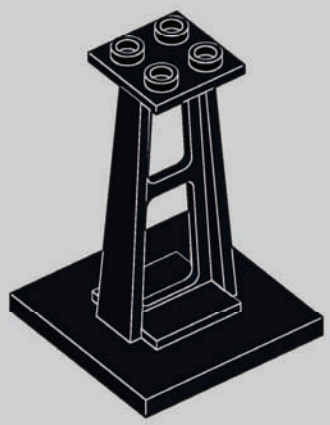
1x

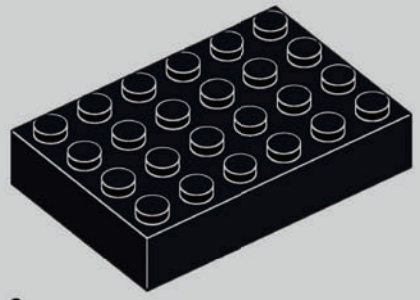
9x

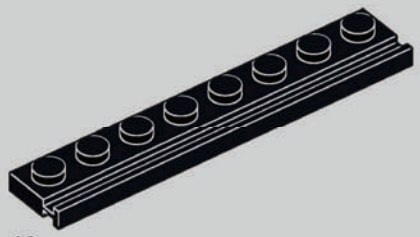
48x

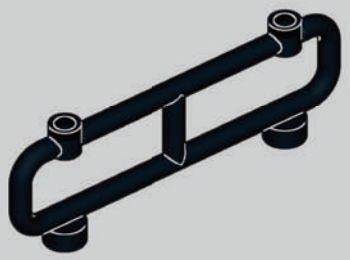
1x

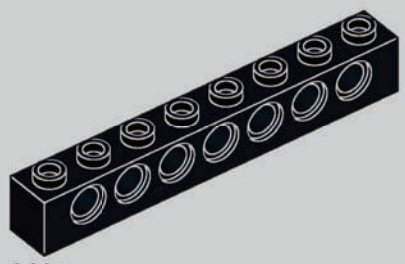
141x

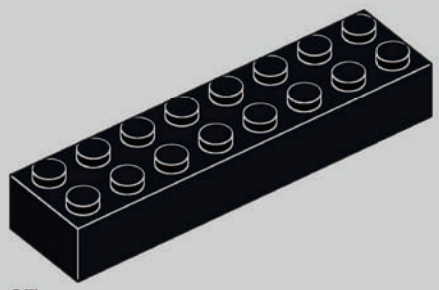
27x

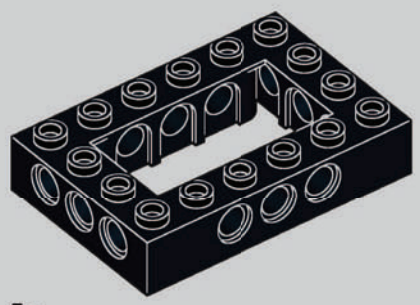
5x


316x

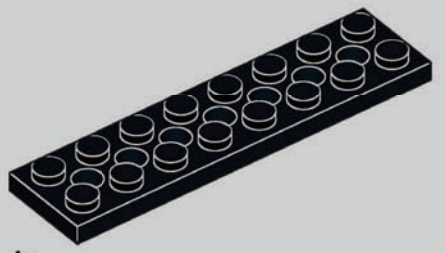
4x

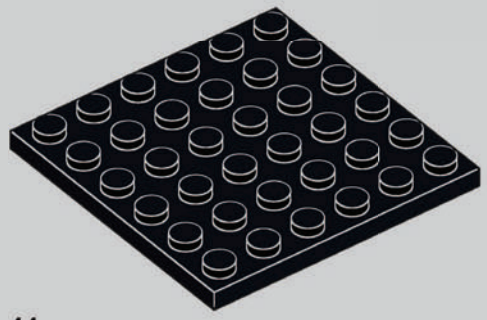
44x

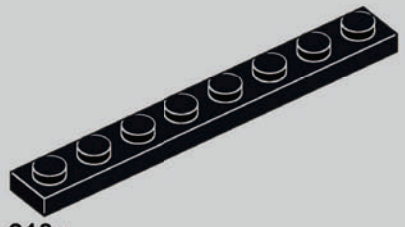
218x

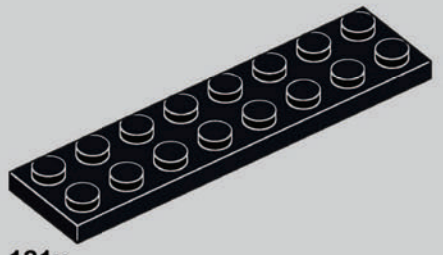
121x

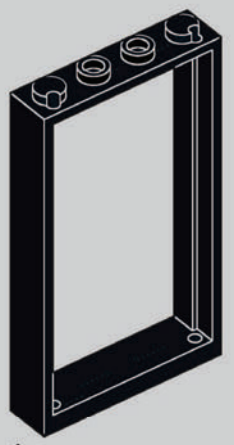

1x

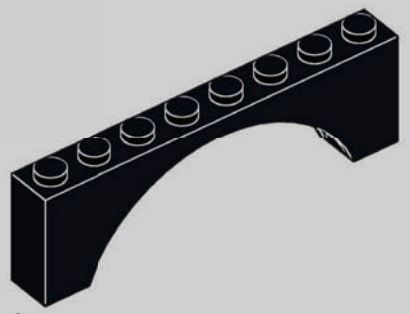

1x



4x

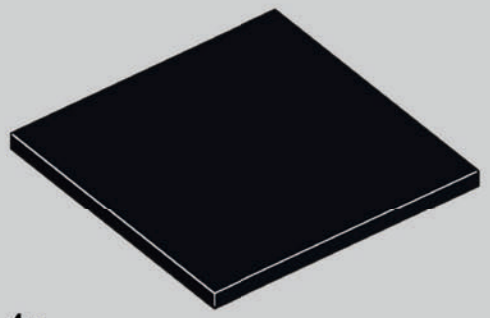

4x

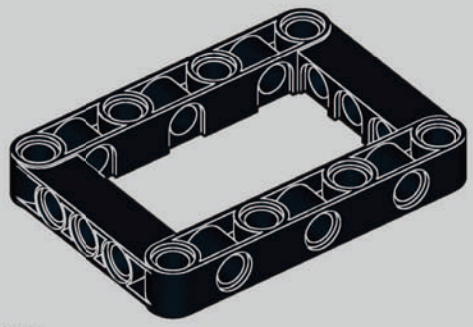

30x

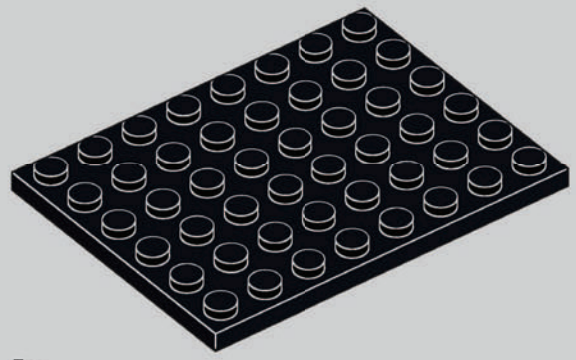

5x



8x

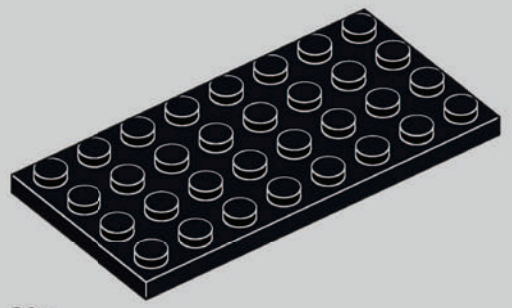

20x

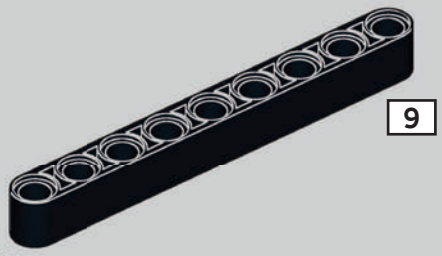

9

305x

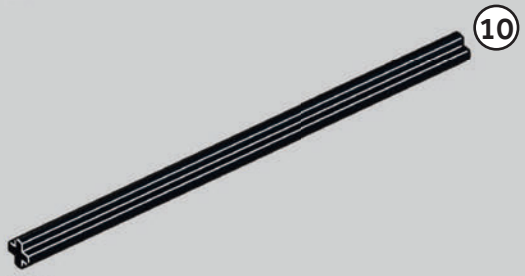

10

14x

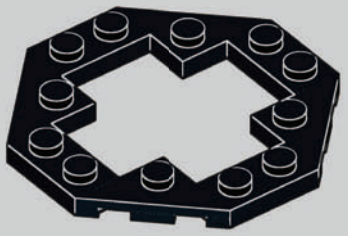

3x

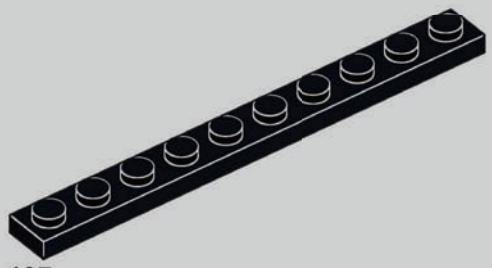

187x

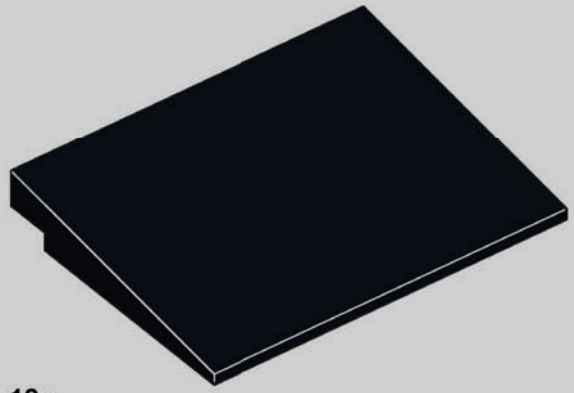

12x

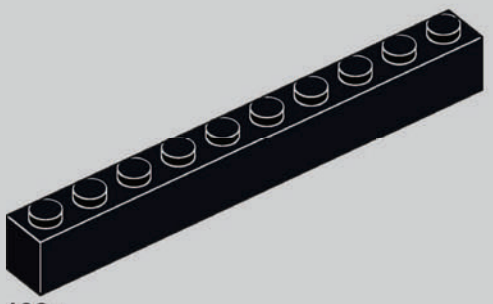

102x

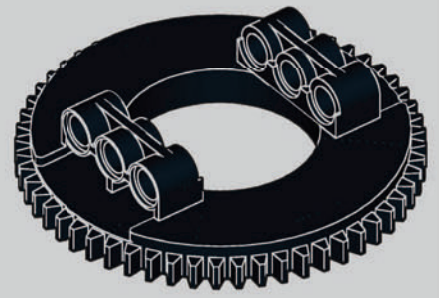

2x

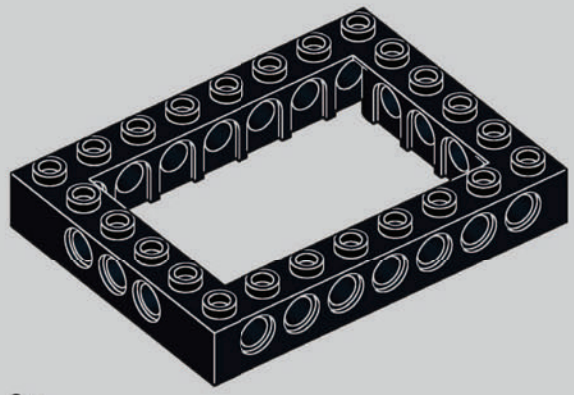

3x

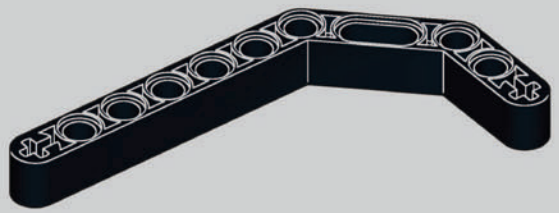

3x

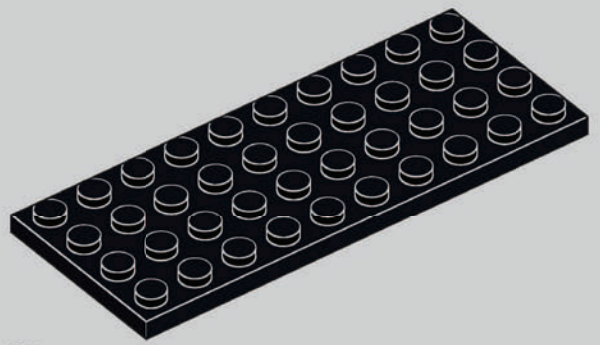

23x

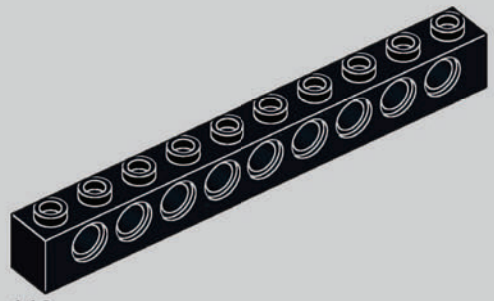

113x

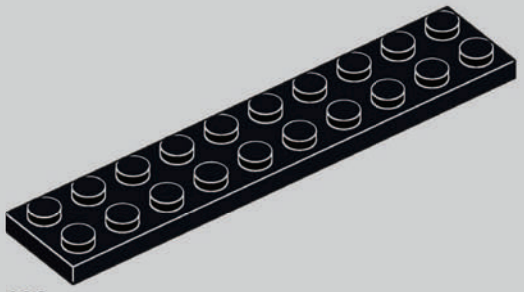

108x

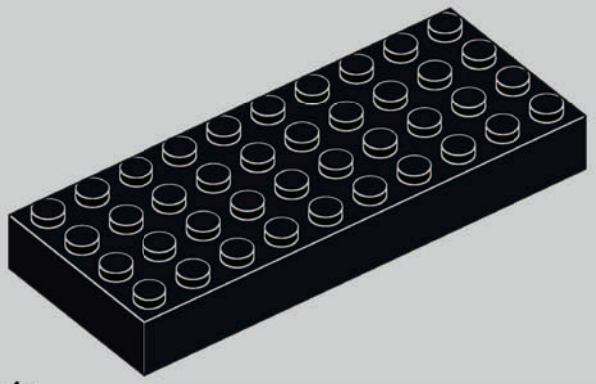

4x

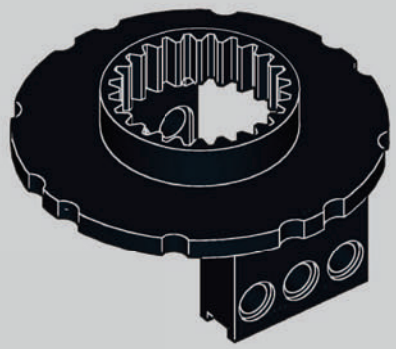

1x

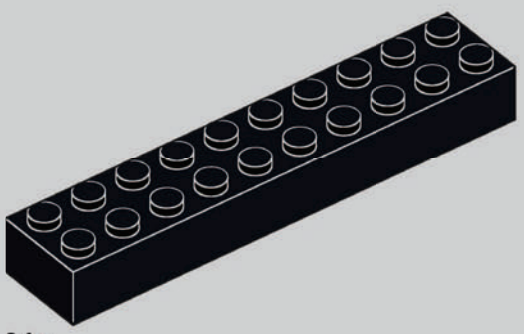

34x

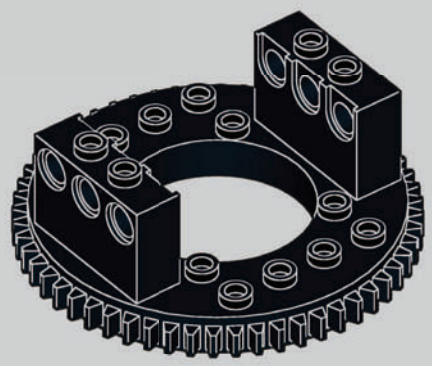

1x

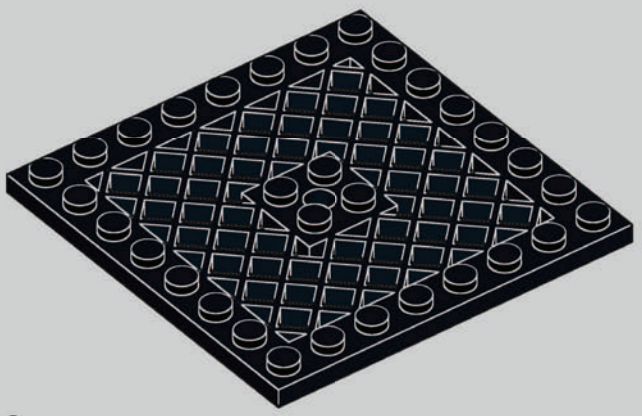

2x

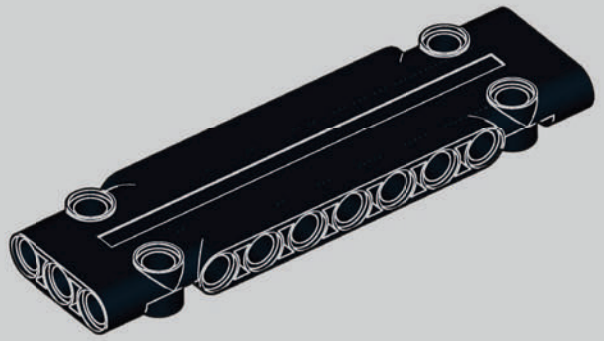

11x



11

84x

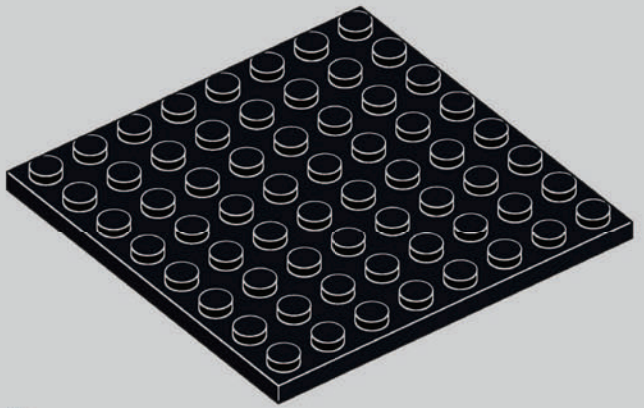

5x

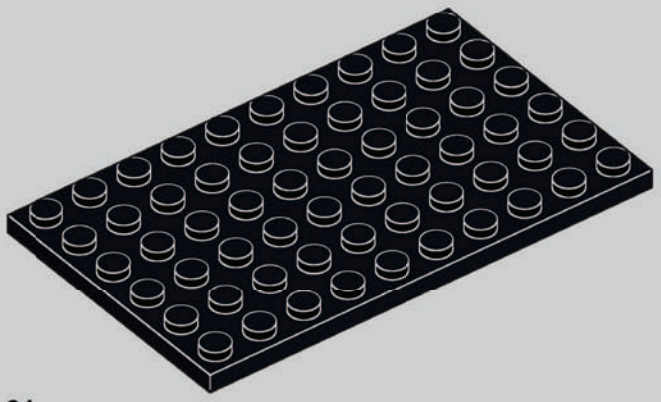

31x

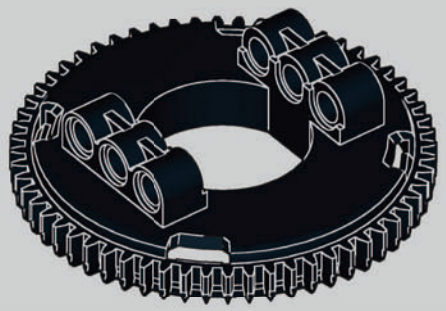

7x

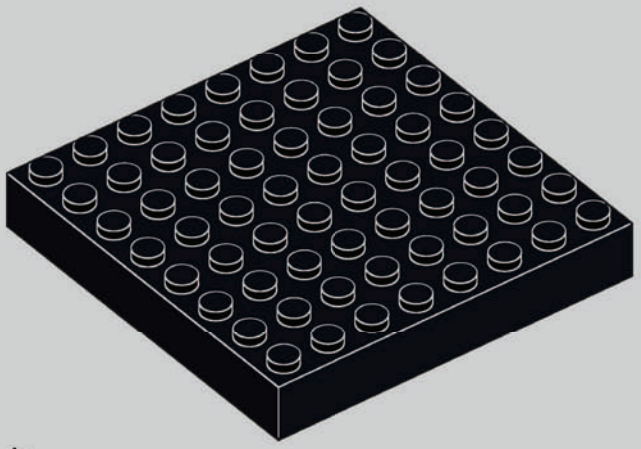

1x

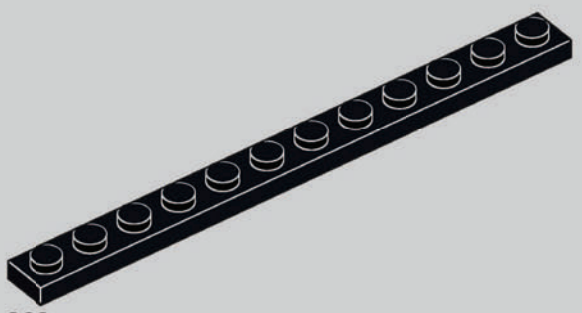

366x

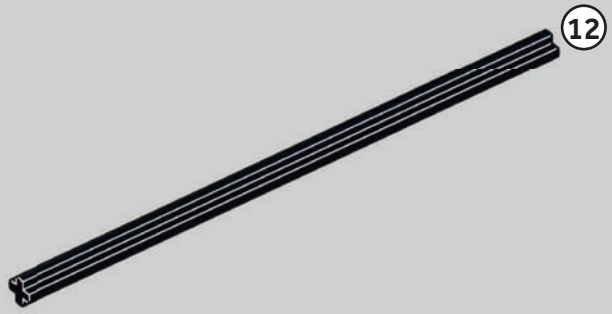

12

14x

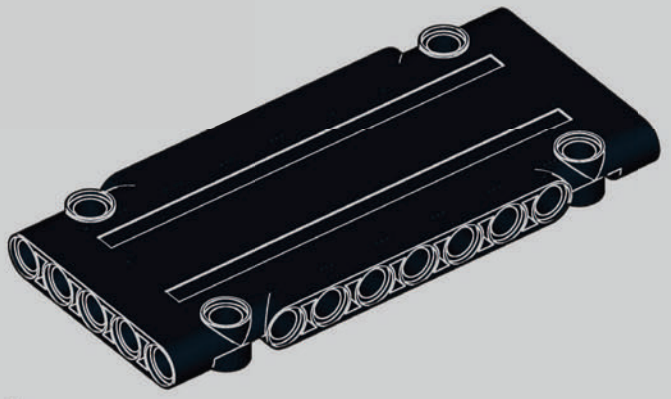

1x

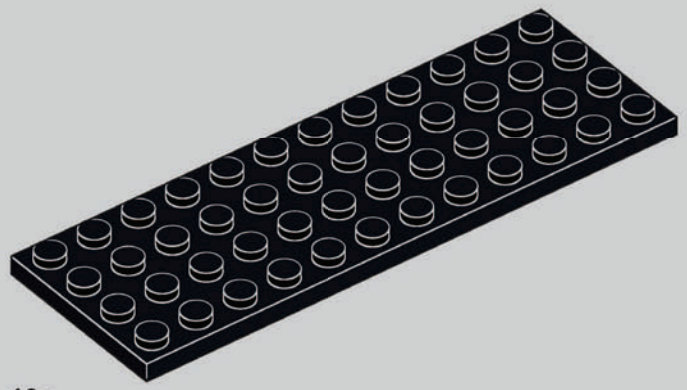

10x

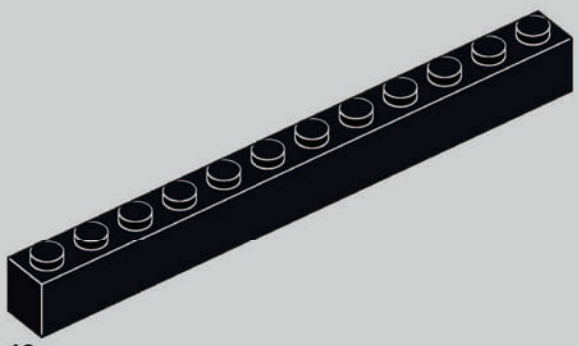

42x



13

71x

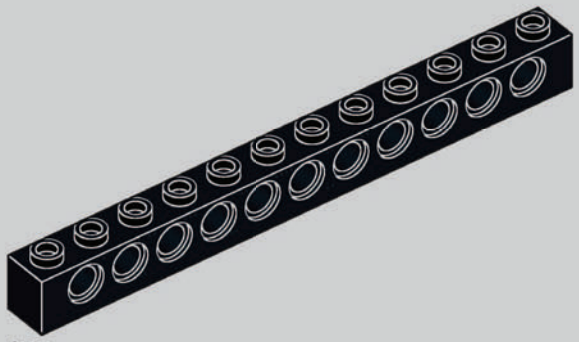

132x

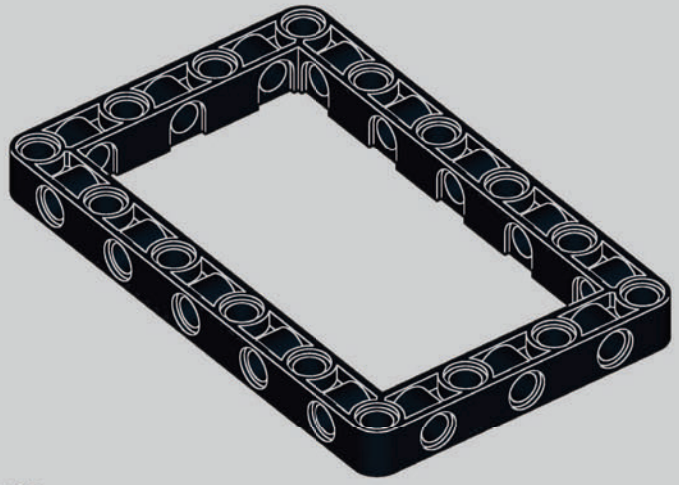

268x

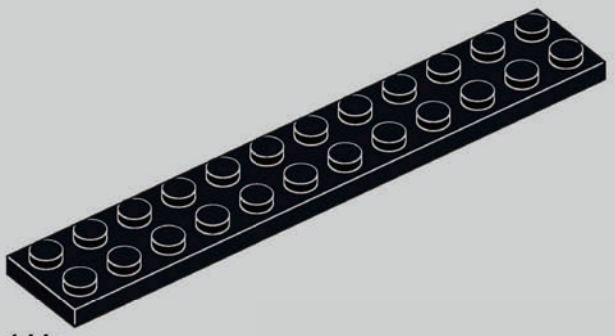

144x

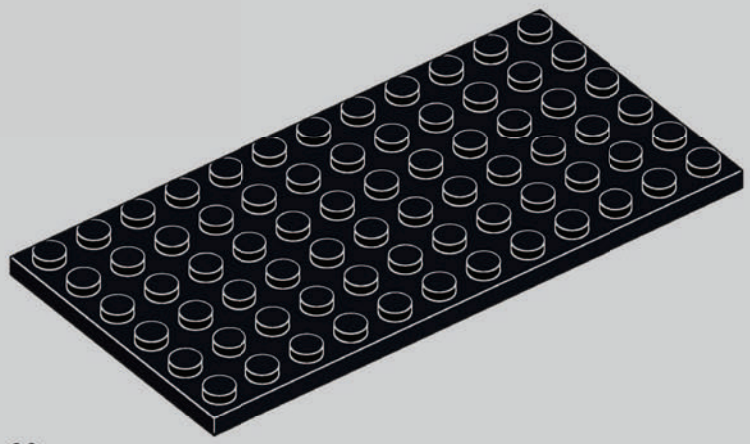

22x

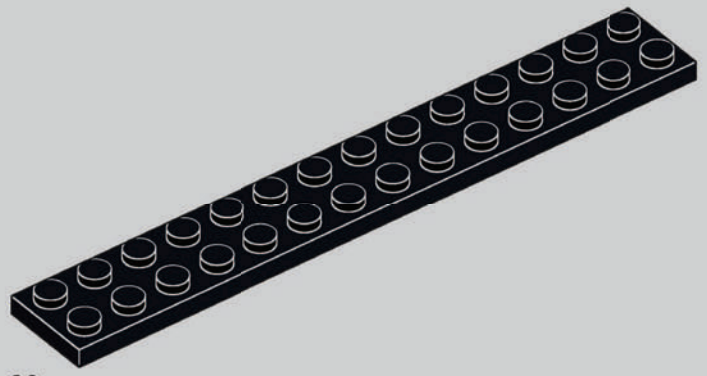

26x

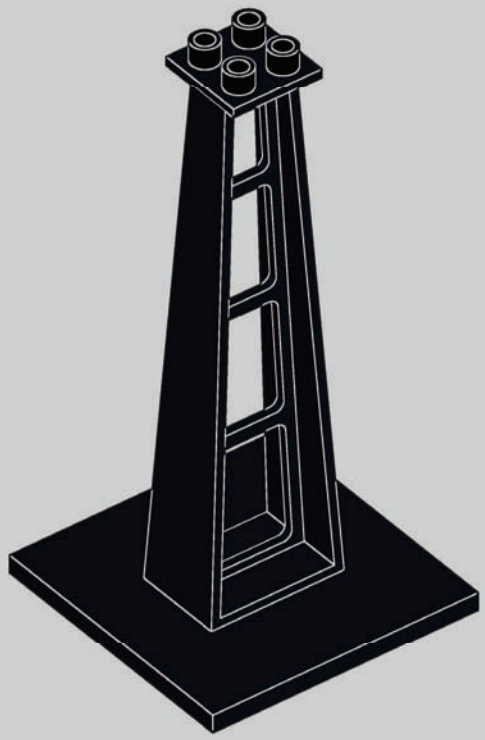

1x

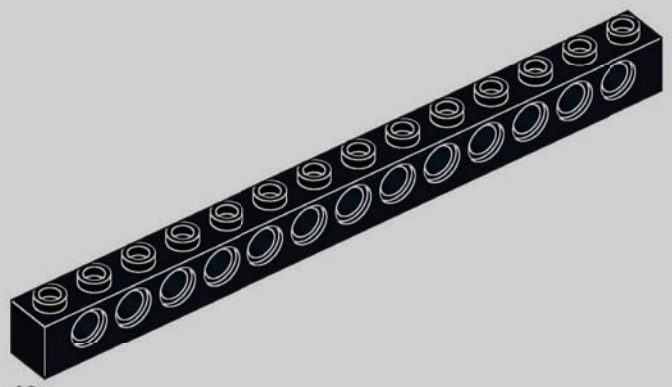

43x

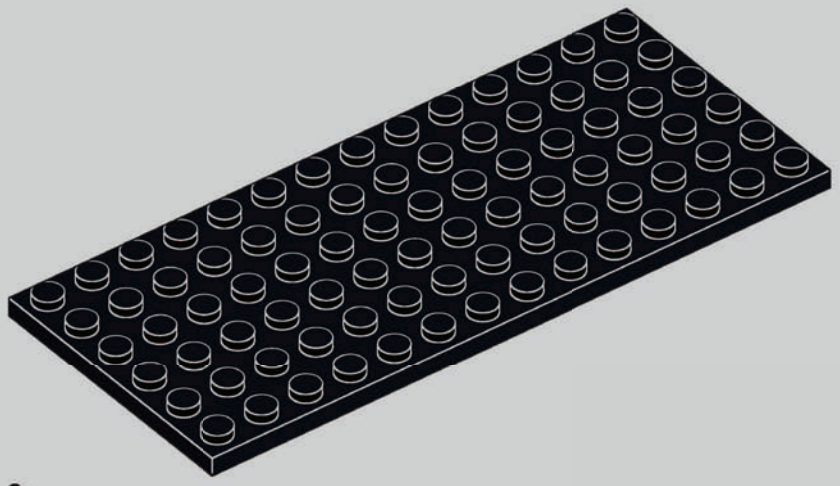

2x



15

69x

16

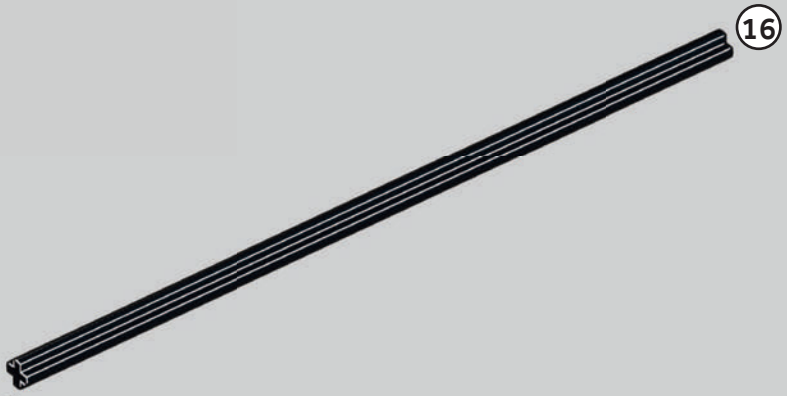

3x

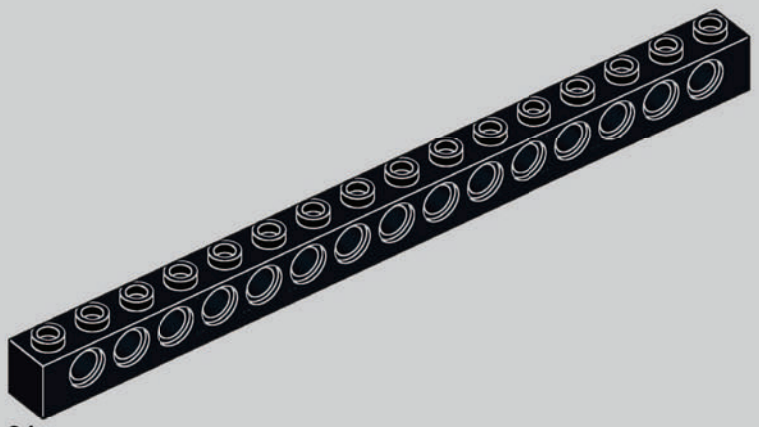

91x

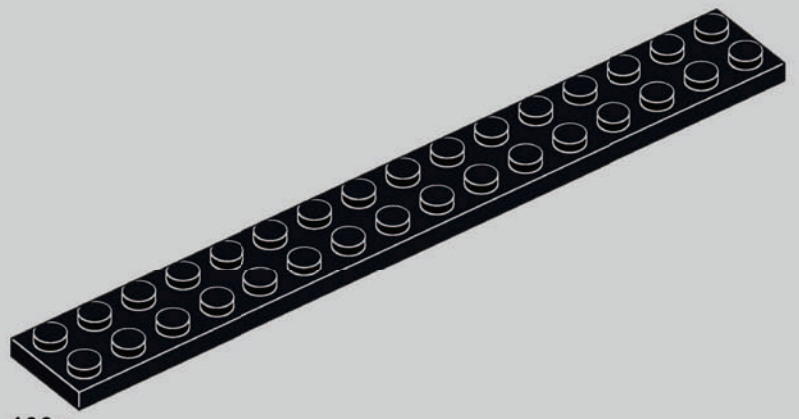

100x

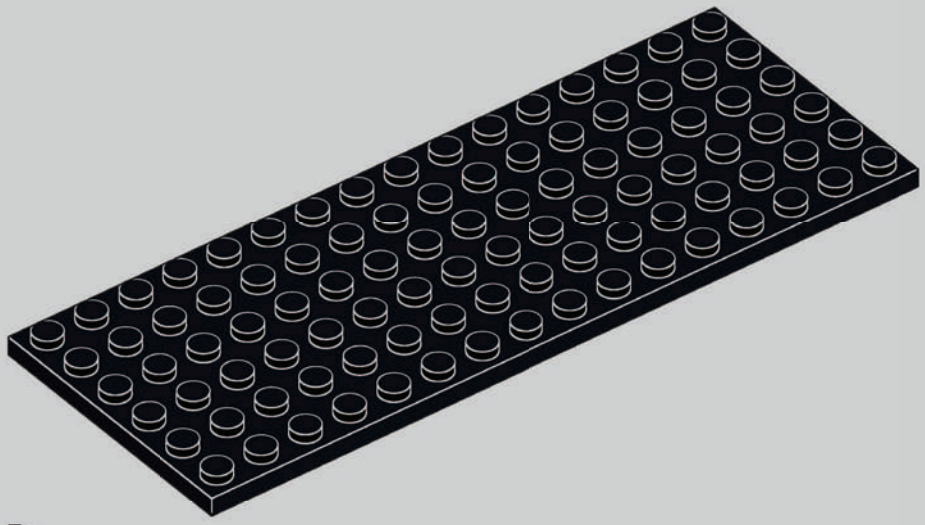

7x

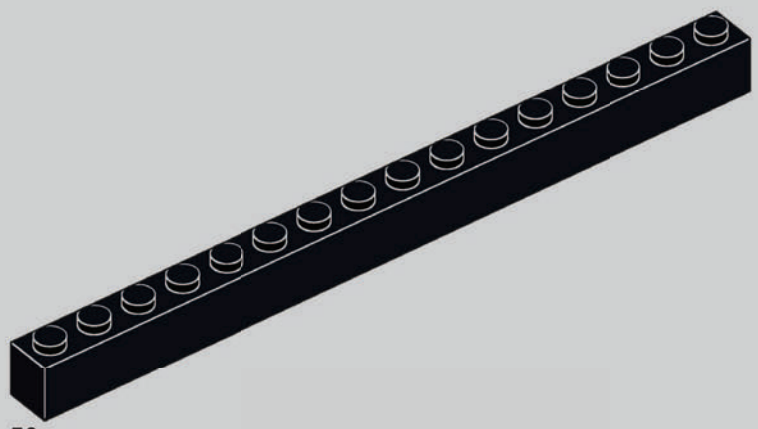

50x

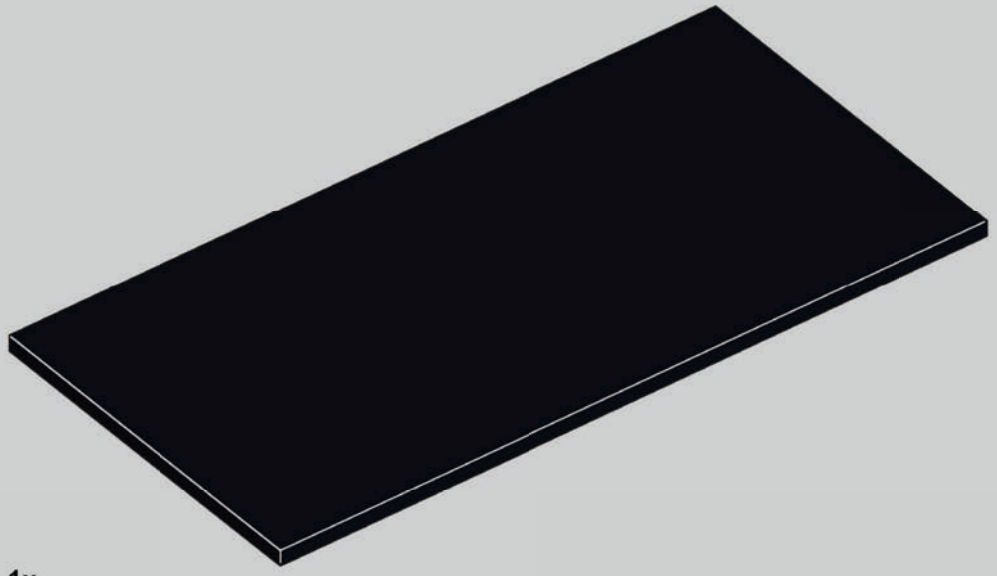

1x

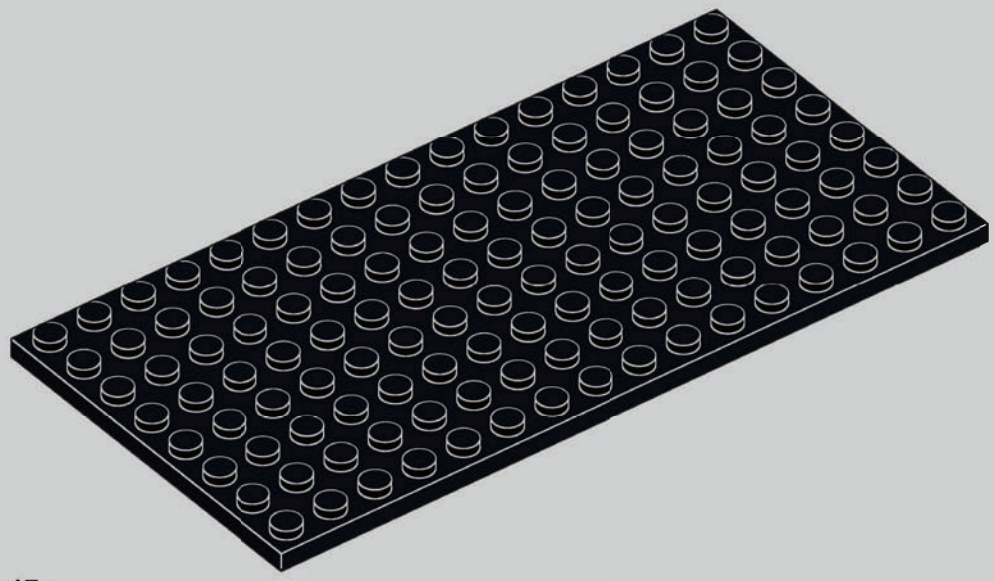

17x

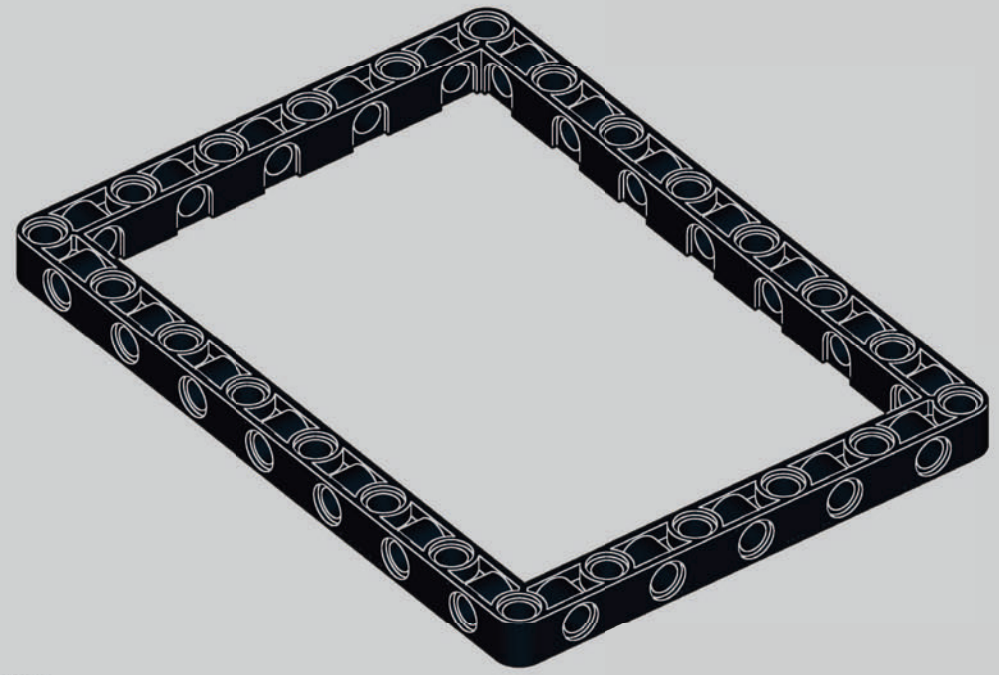

10x

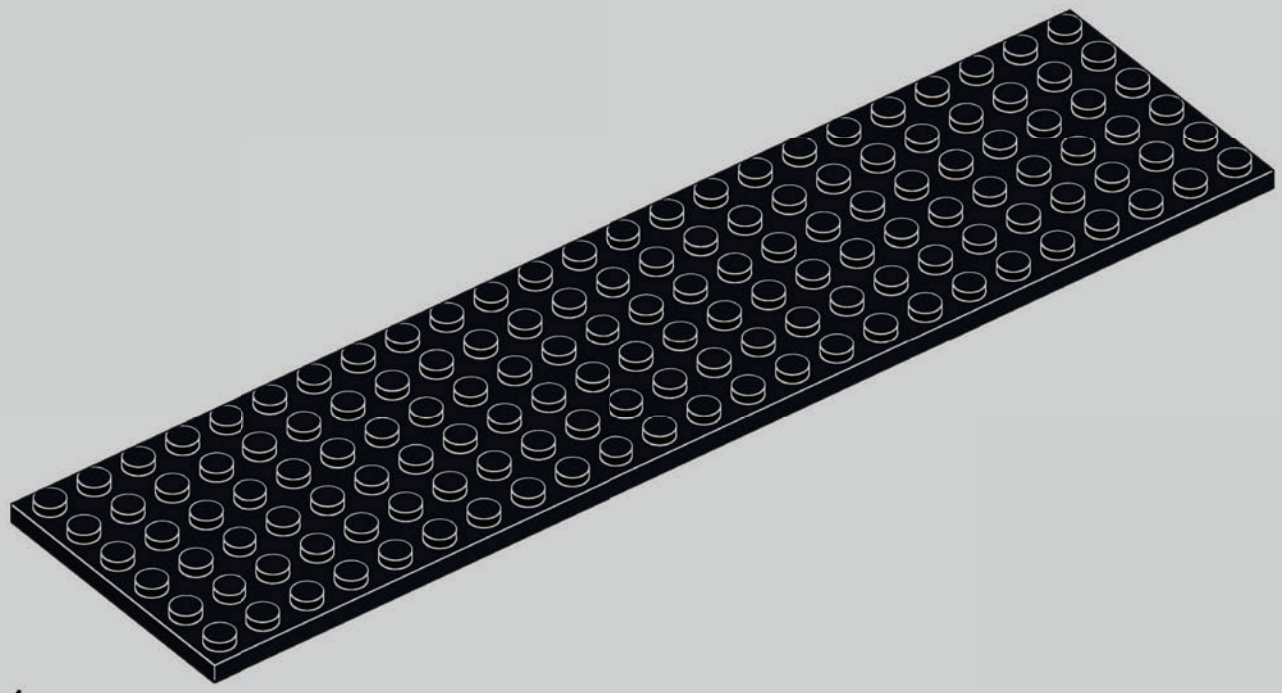

4x

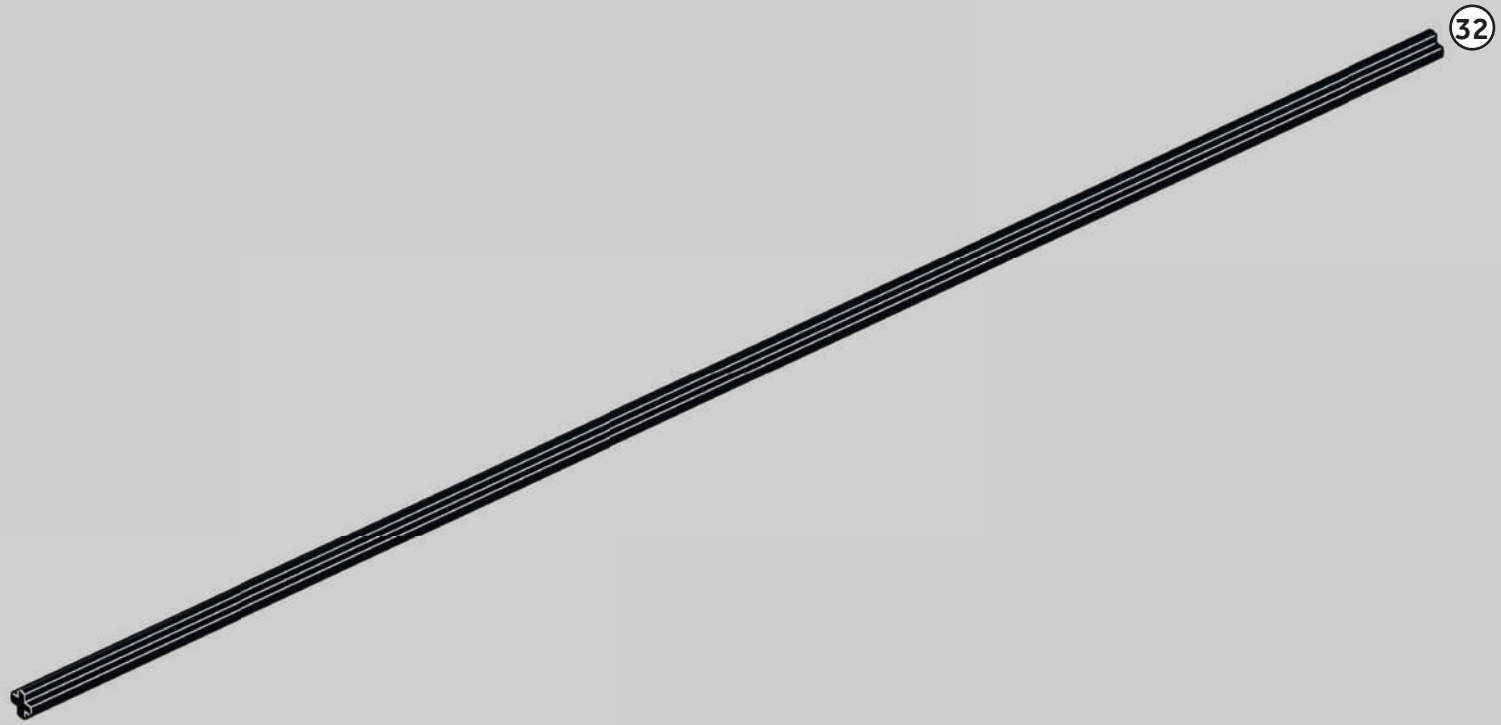

2x

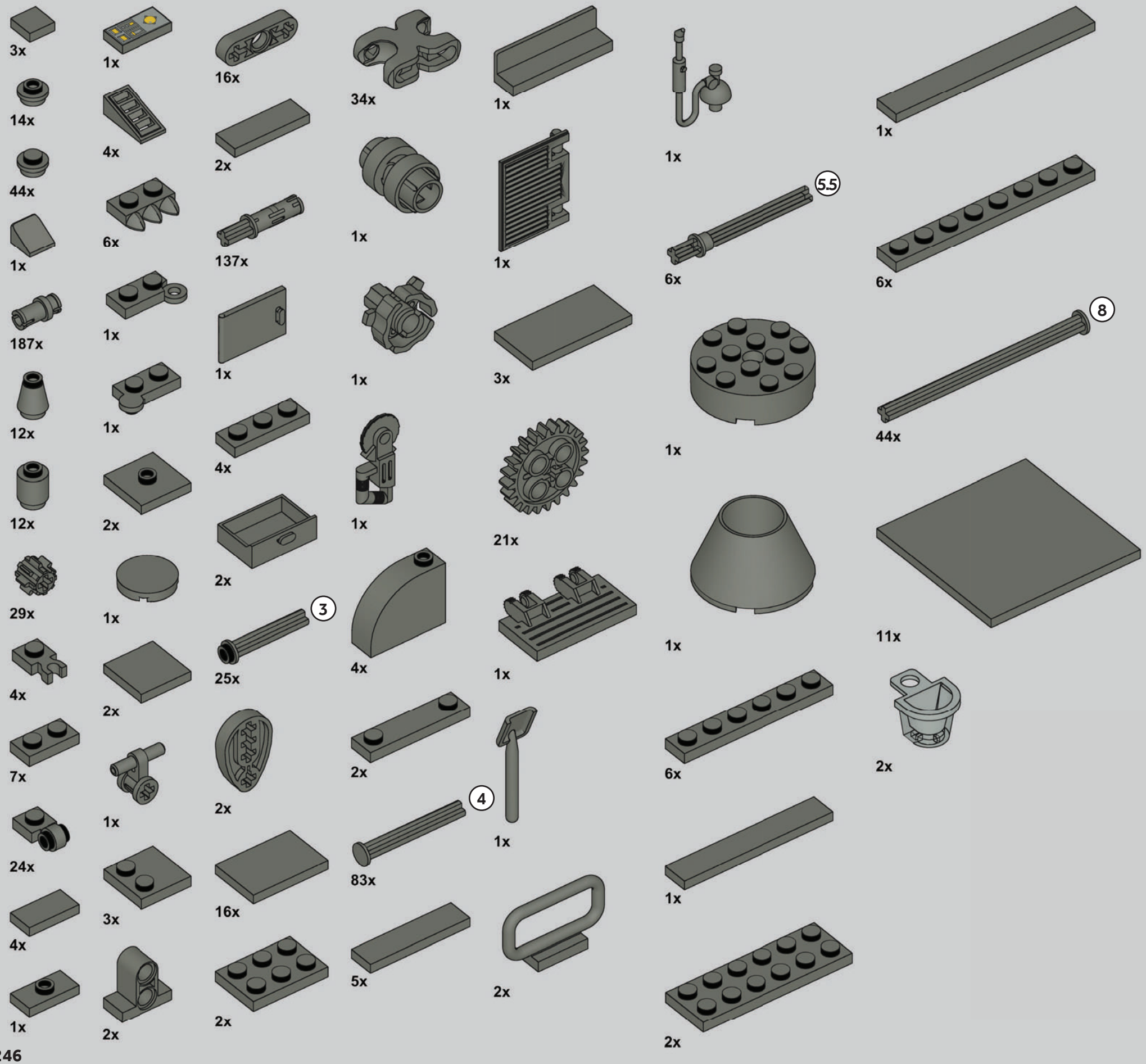
3x
1x
16x
34x
1x
1x
1x
14x
4x
2x
1x
5.5
6x
6x
44x
6x
137x
1x
1x
1x
187x
1x
1x
1x
3x
8
12x
1x
4x
1x
44x
12x
2x
1x
21x
1x
11x
29x
1x
2x
3
25x
4x
1x
4x
2x
6x
2x
7x
1x
2x
2x
4
1x
24x
1x
83x
3x
16x
4x
5x
2x
1x
2x
2x
1x
2x

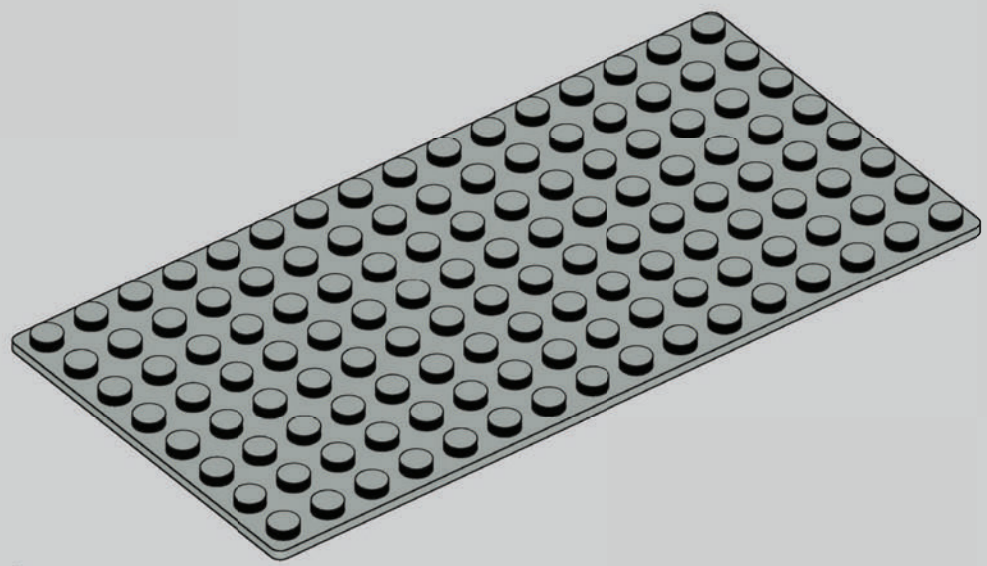

1x

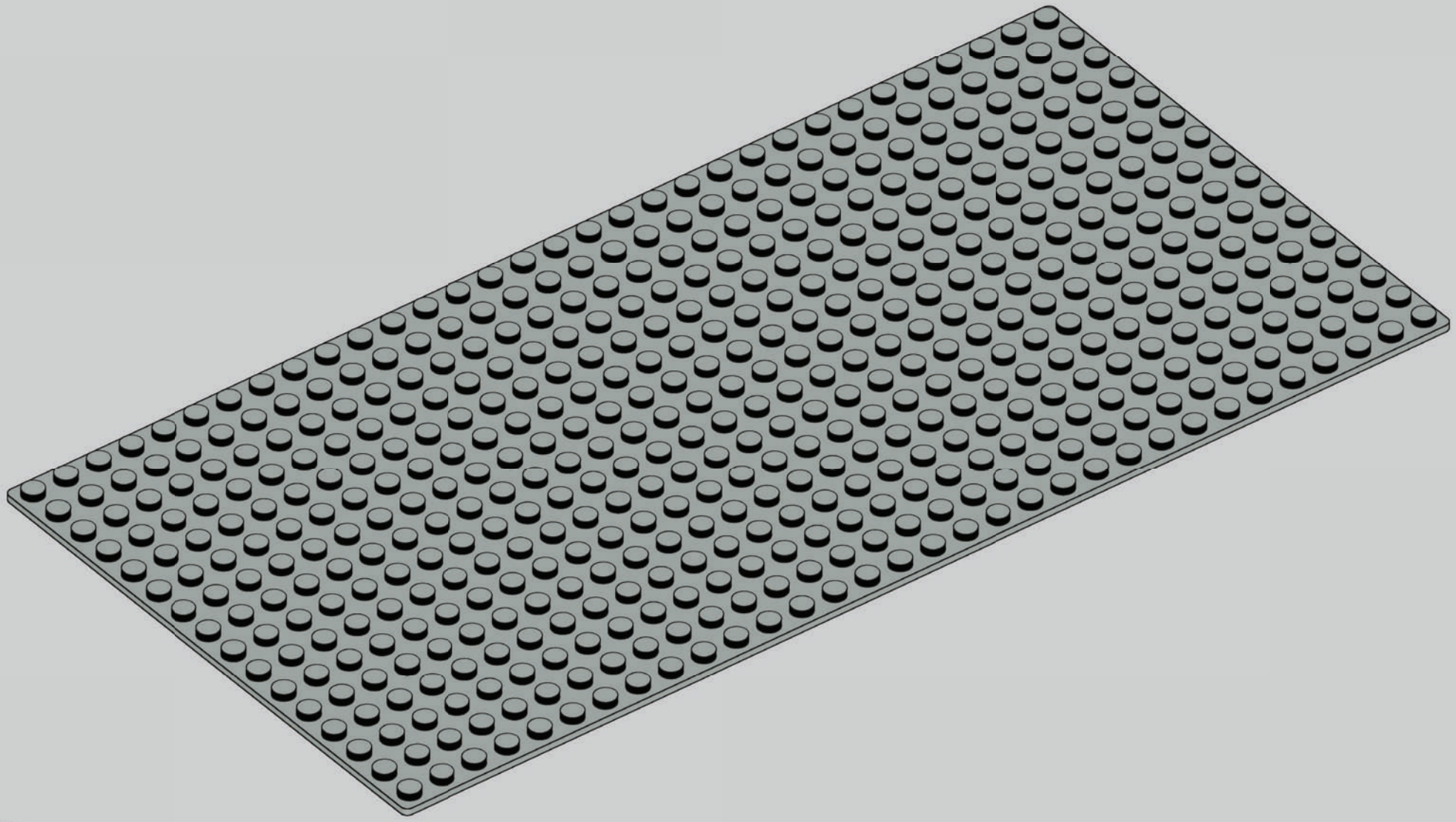

3x

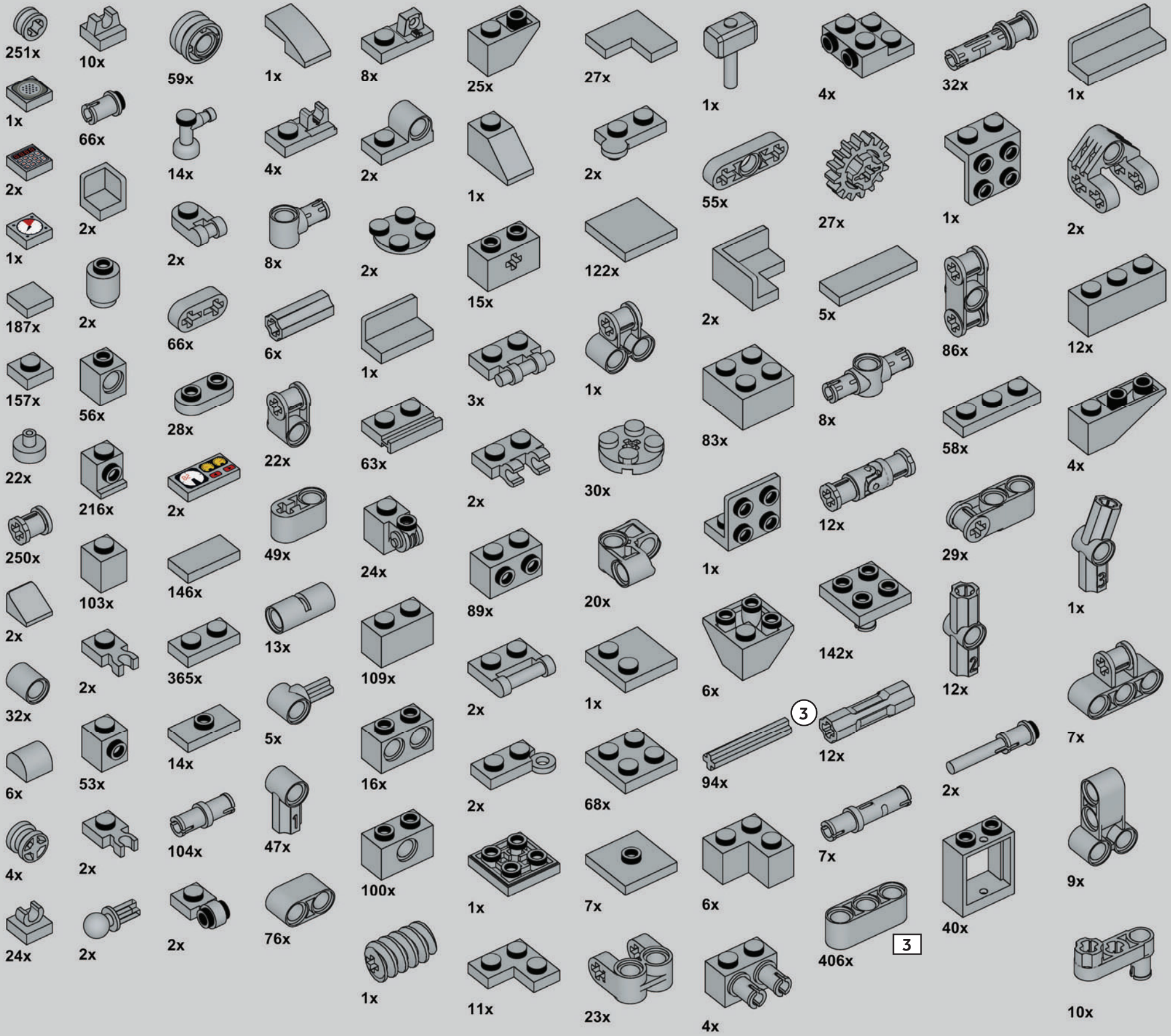
251x
10x
59x
1x
8x
25x
27x
1x
4x
32x
1x
1x
66x
14x
4x
2x
1x
2x
55x
27x
1x
2x
2x
2x
8x
2x
122x
2x
5x
86x
12x
187x
2x
66x
6x
1x
15x
1x
3x
83x
8x
58x
4x
157x
56x
28x
22x
63x
2x
30x
12x
29x
1x
22x
216x
2x
49x
24x
89x
20x
1x
142x
12x
2x
250x
103x
146x
13x
109x
2x
1x
6x
3
12x
7x
2x
365x
5x
16x
2x
68x
94x
2x
32x
53x
14x
47x
100x
1x
7x
6x
7x
9x
6x
2x
104x
76x
1x
11x
23x
4x
406x
3
40x
10x
24x
2x
2x

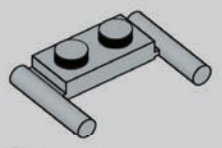
2x

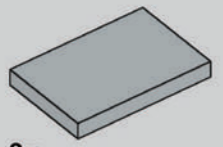
9x

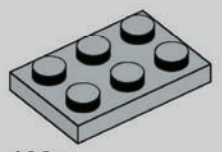
199x


1x

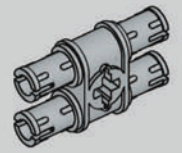
4x

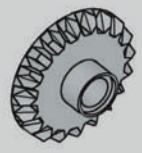
6x


2x

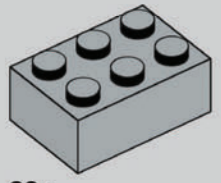
28x

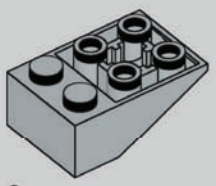
6x

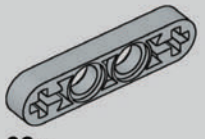
68x

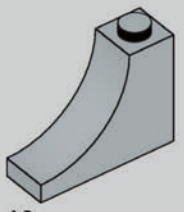
10x

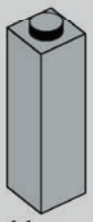
11x


4x


20x

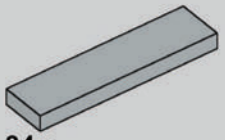
34x

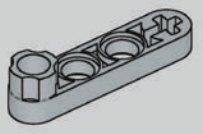
2x

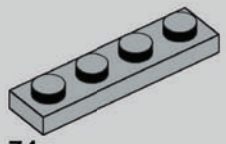
74x

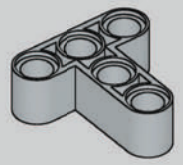
30x


117x

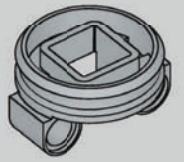
2x

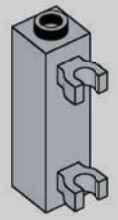
1x

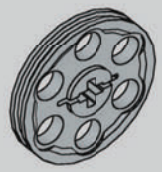
10x

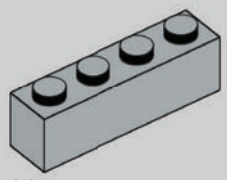
90x

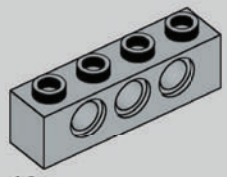
12x

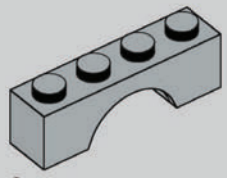
2x

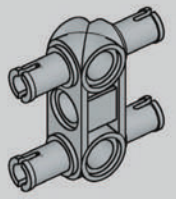
15x

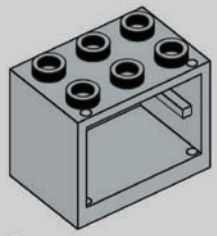
2x

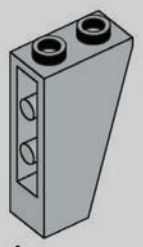
1x

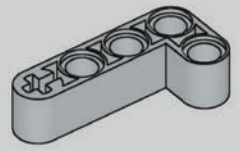
56x

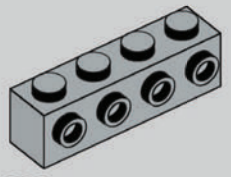
229x

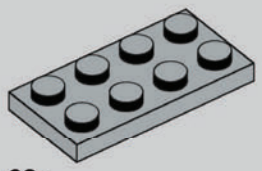
62x

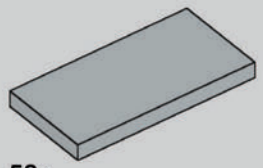
58x

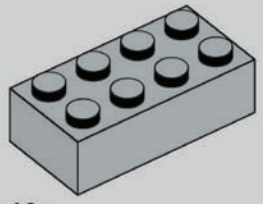
10x

1x

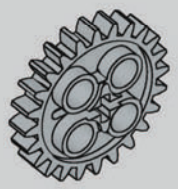
4x

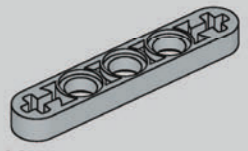
16x

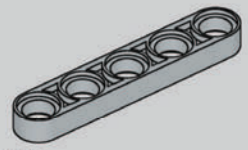
14x

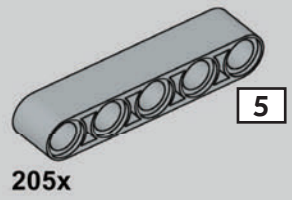
205x

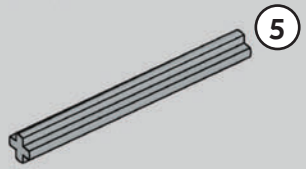
30x

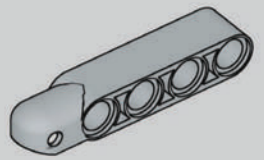
16x


1x

4x

3x

16x

2x

17x

4x

144x

70x

102x

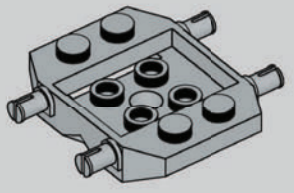

1x

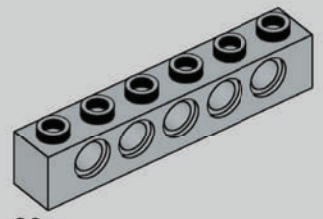

20x

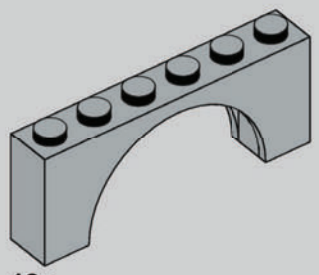

12x

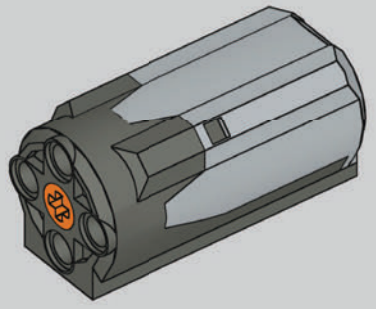

8x

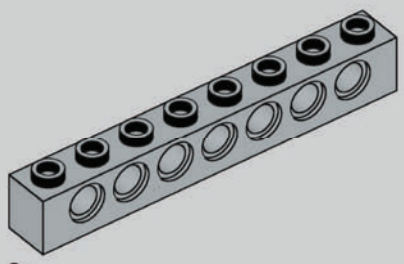

2x

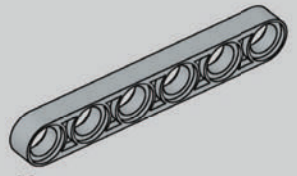

48x

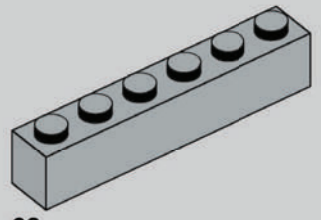

68x

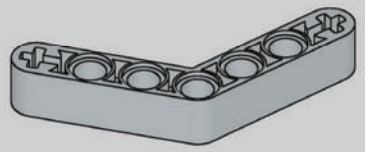

2x

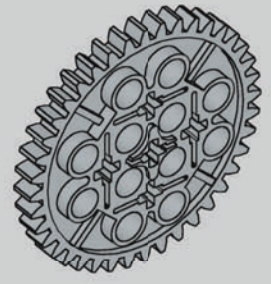

29x

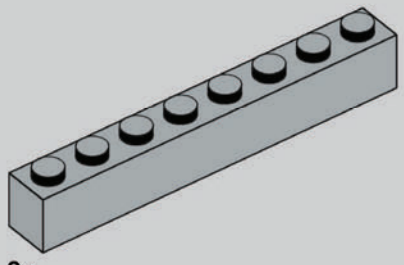

3x

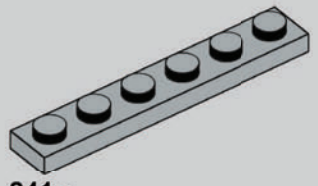

241x

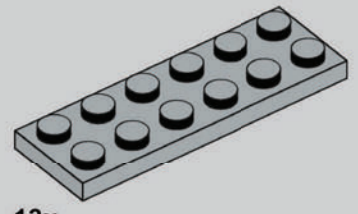

13x

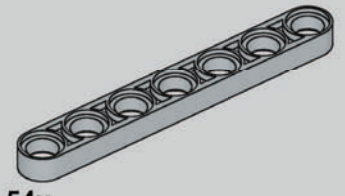

54x

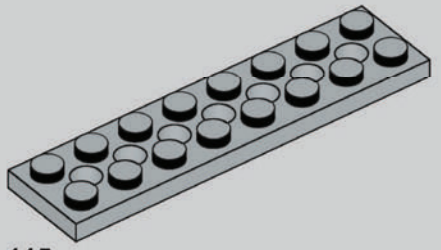

115x

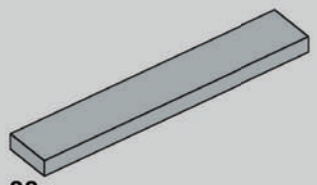

88x

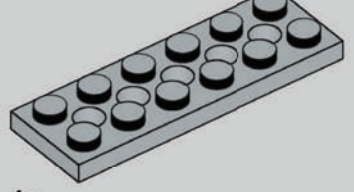

4x

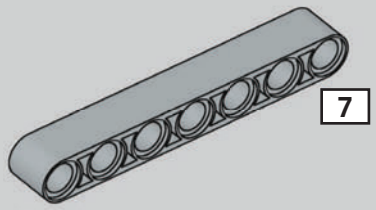

223x

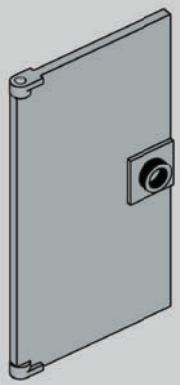

2x

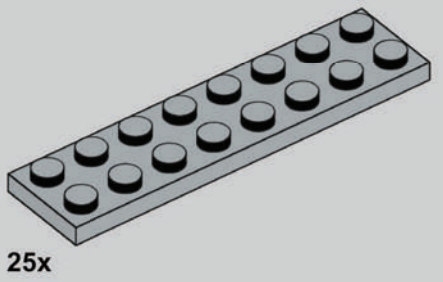

25x

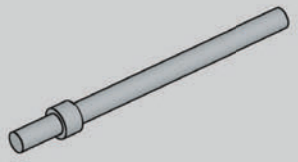

12x

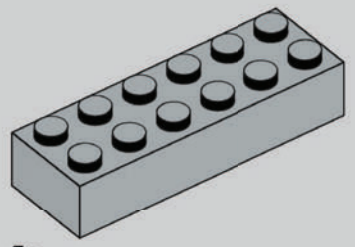

5x

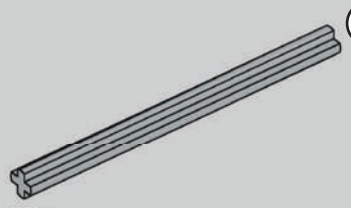

55x

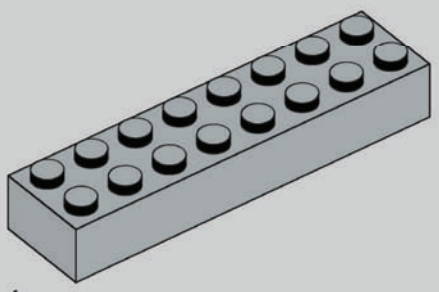

1x

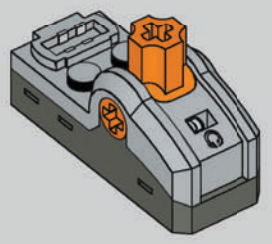

3x

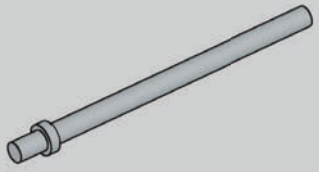

12x

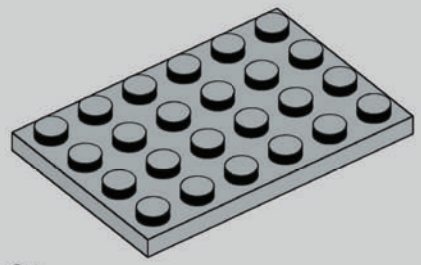

2x

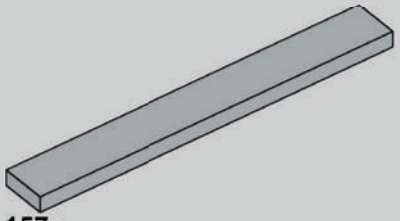

157x

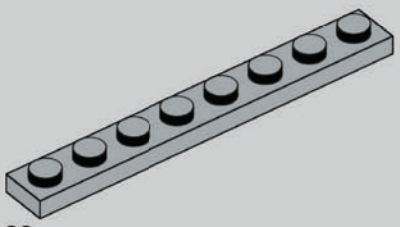

23x

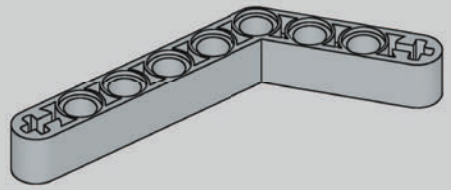

7x

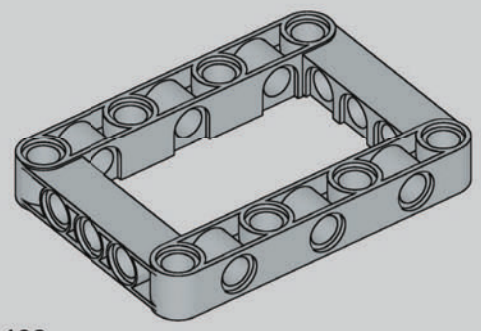

138x

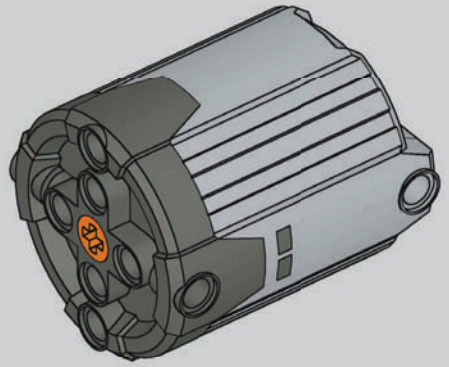

10x

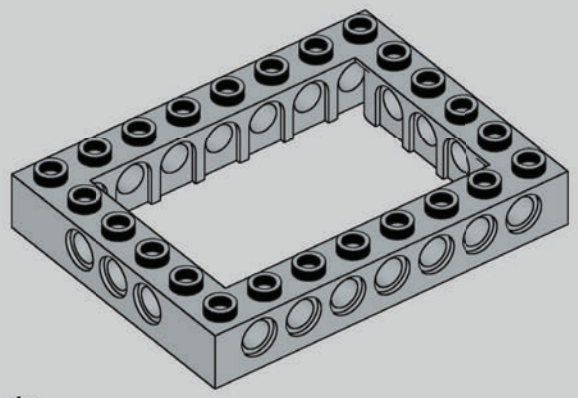

1x

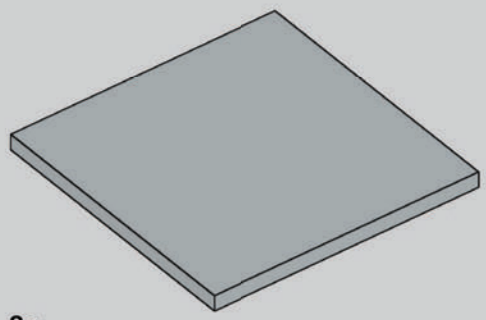

2x

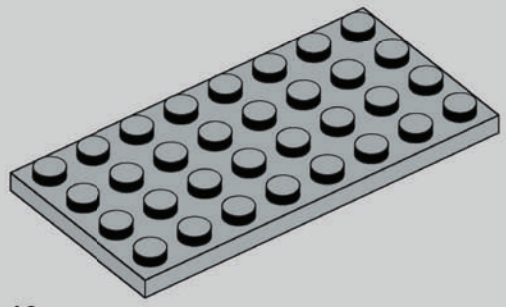

16x

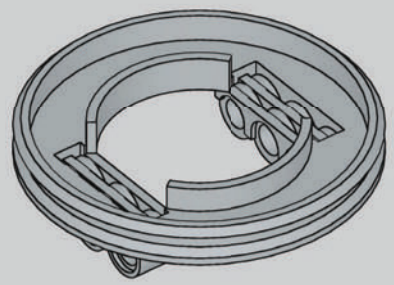

7x

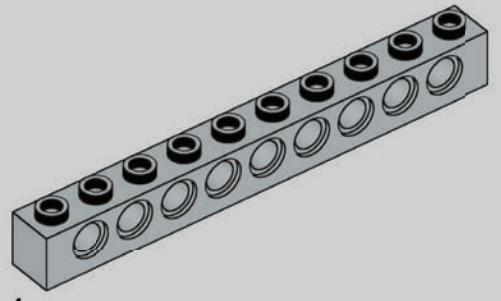

1x

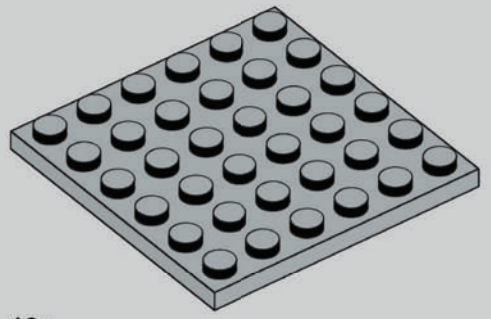

12x

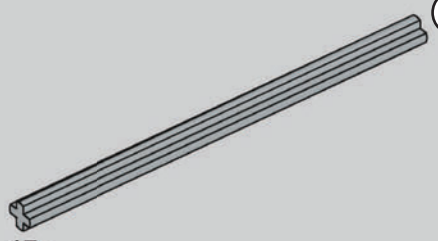

17x

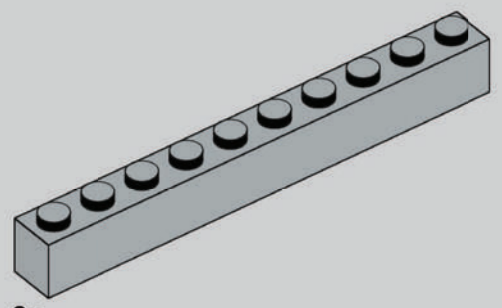

2x

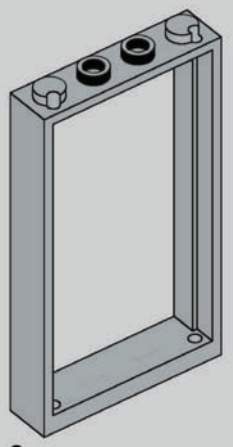

2x

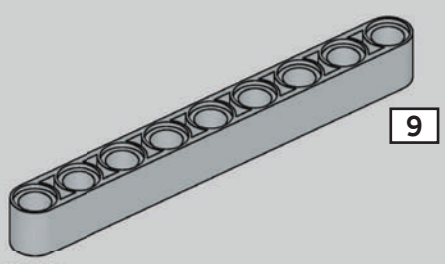

137x

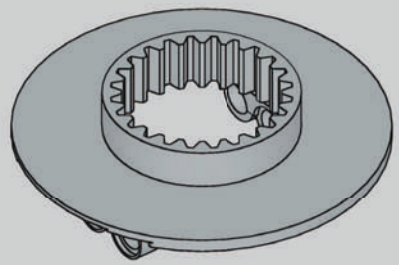

2x

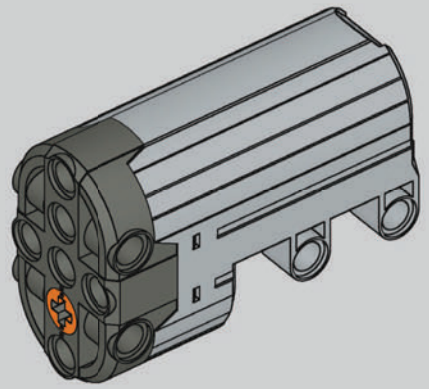

2x

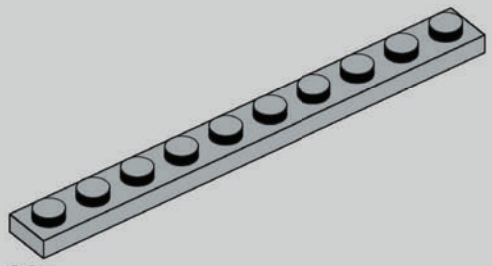

21x

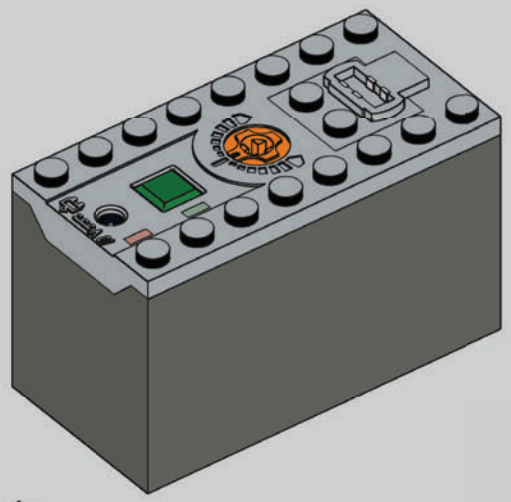

1x

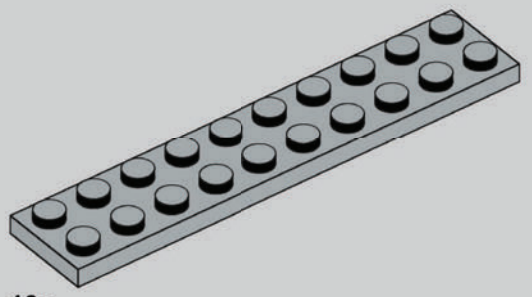

13x

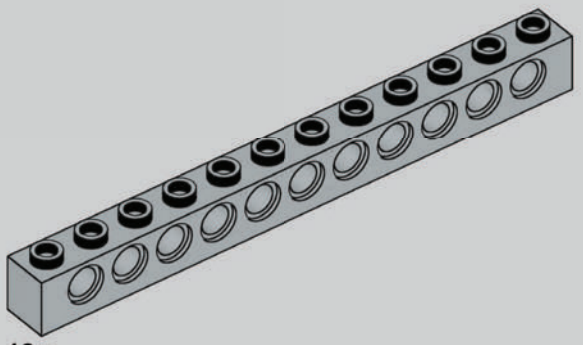

13x

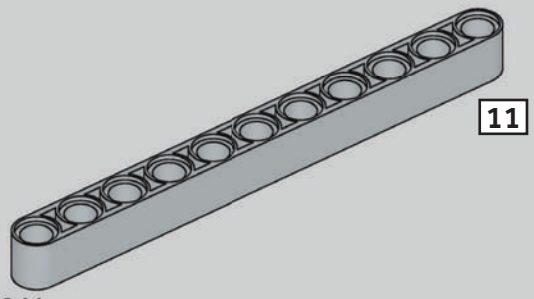

11

241x

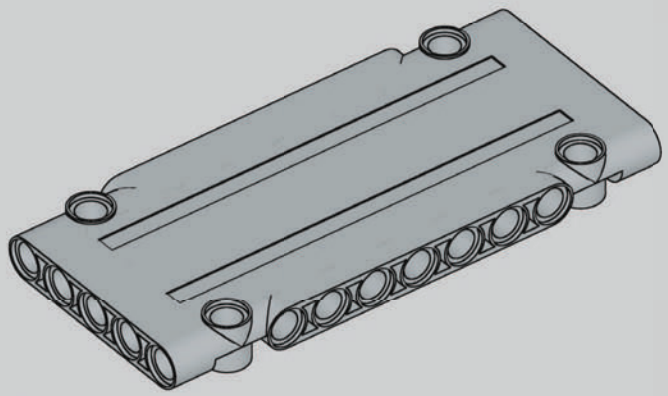

2x

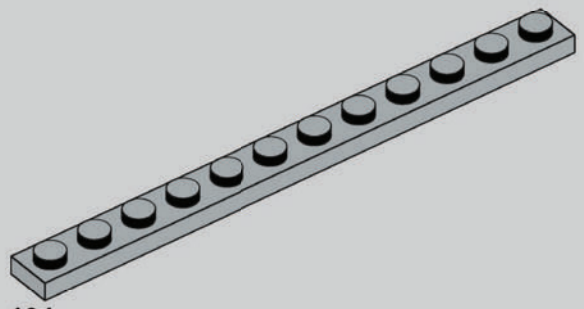

104x

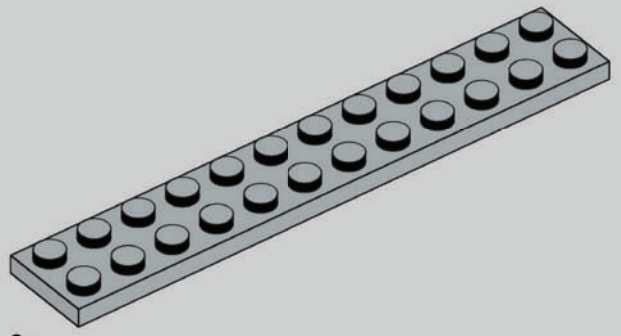

9x

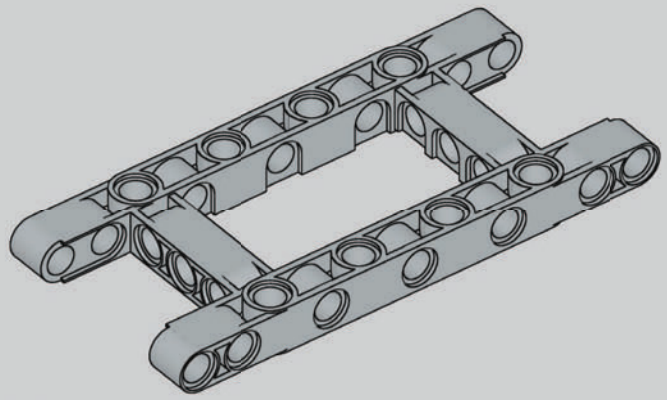

13x

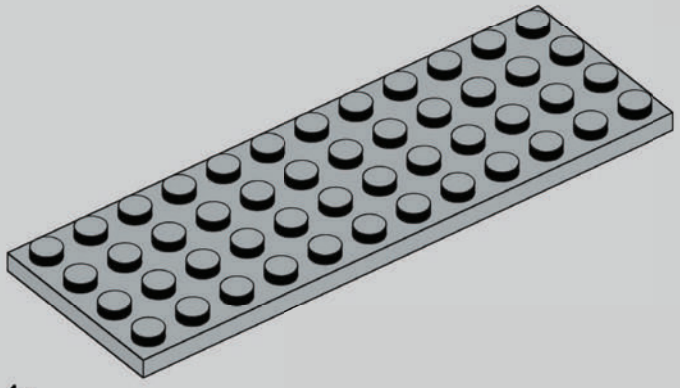

1x

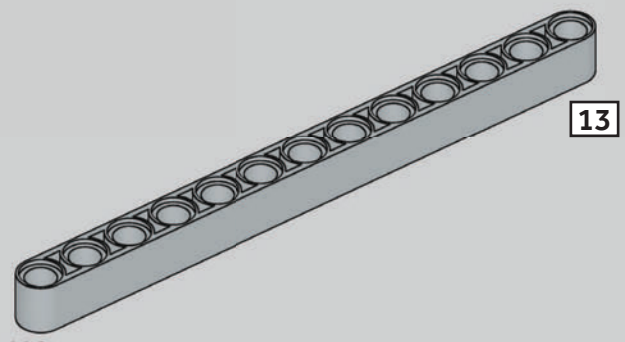

108x

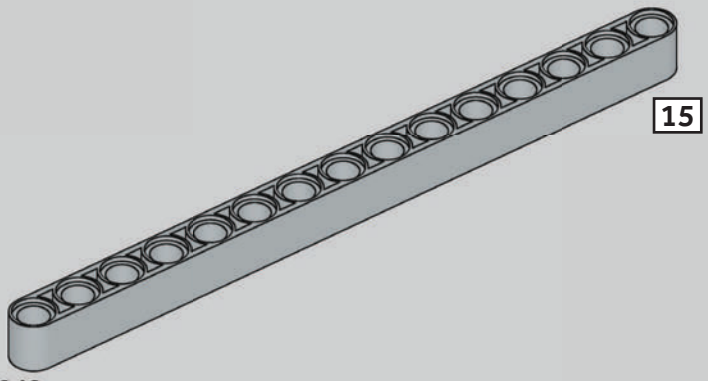

348x

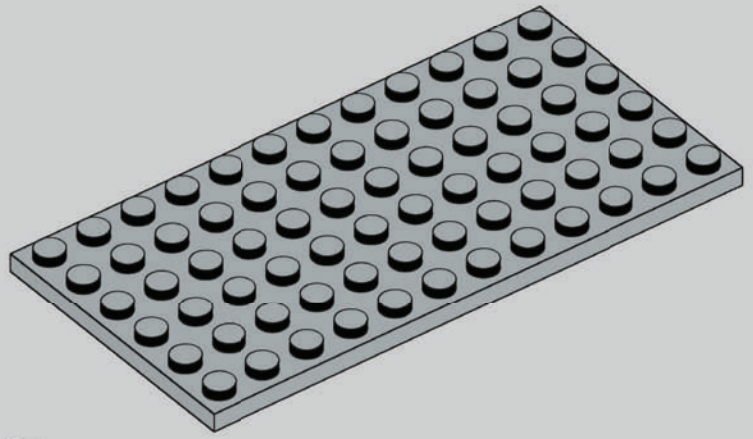

3x

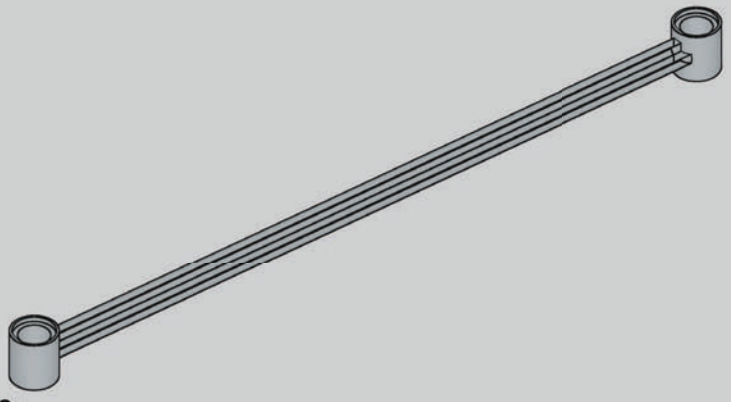

2x

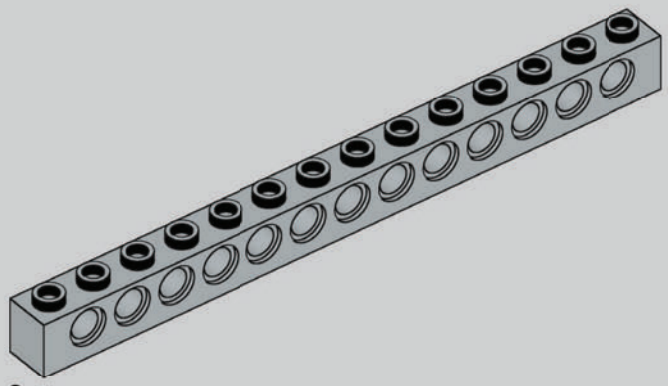

8x

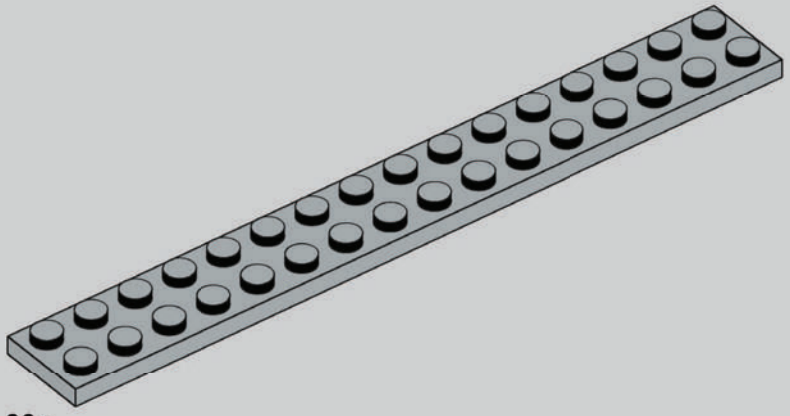

36x

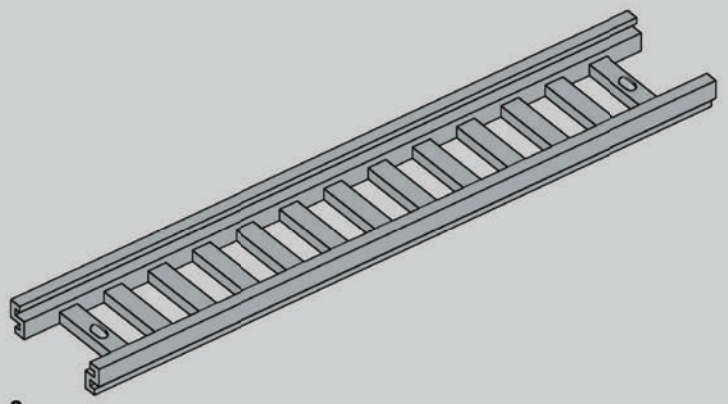

3x

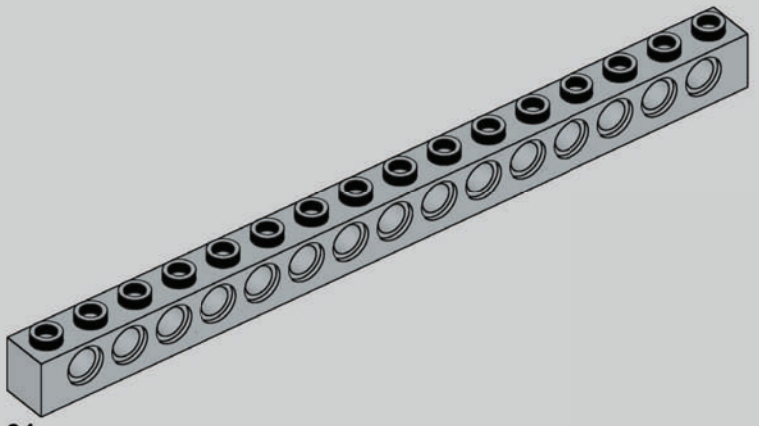

64x

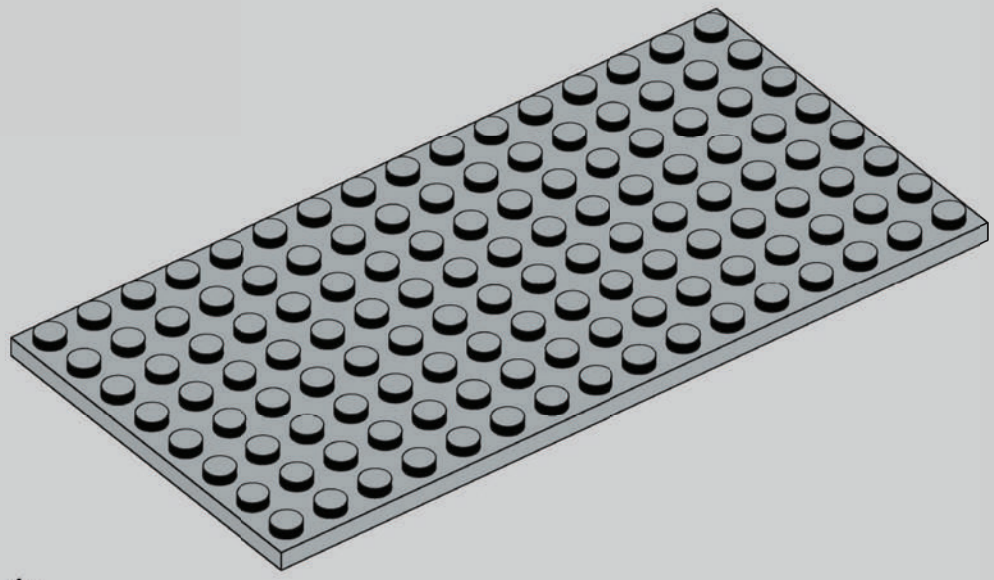

4x

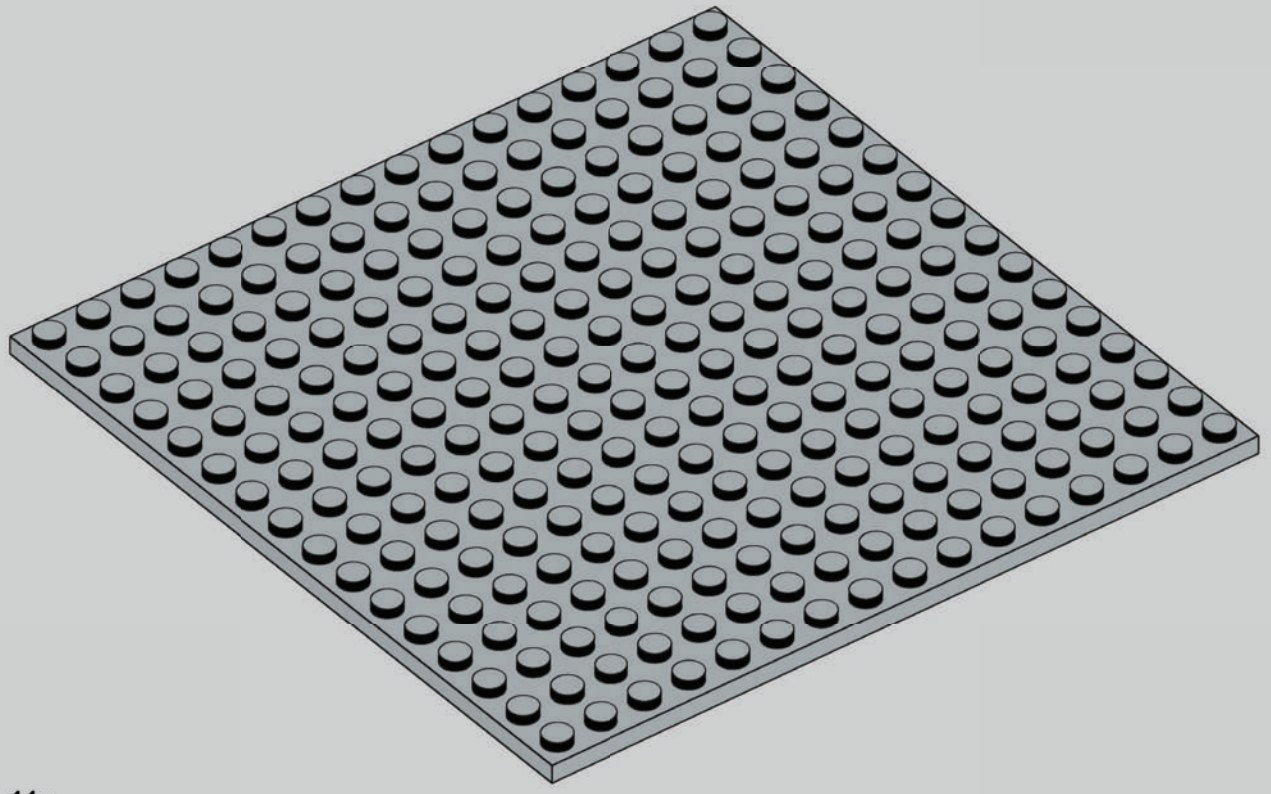

11x

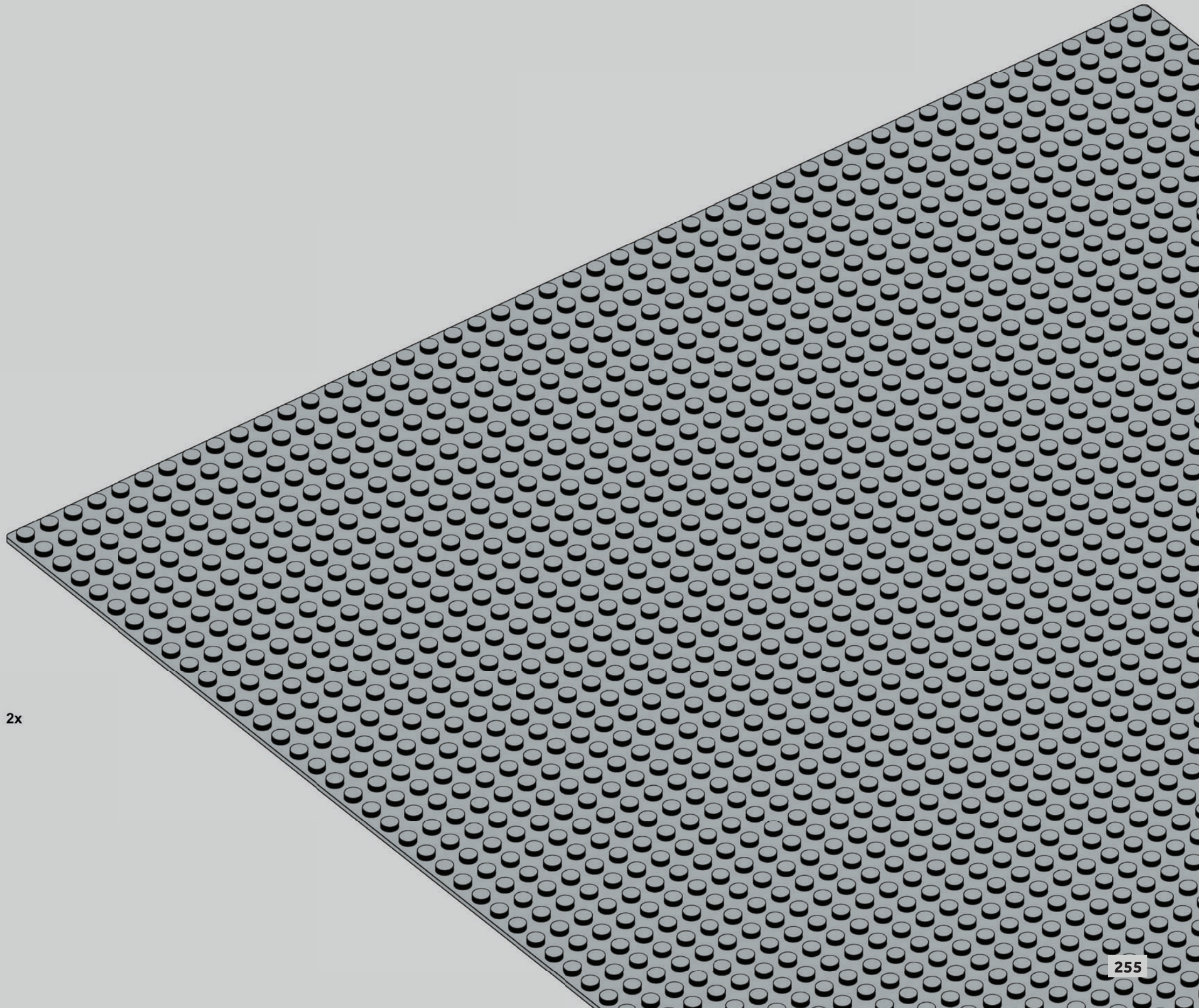

2x

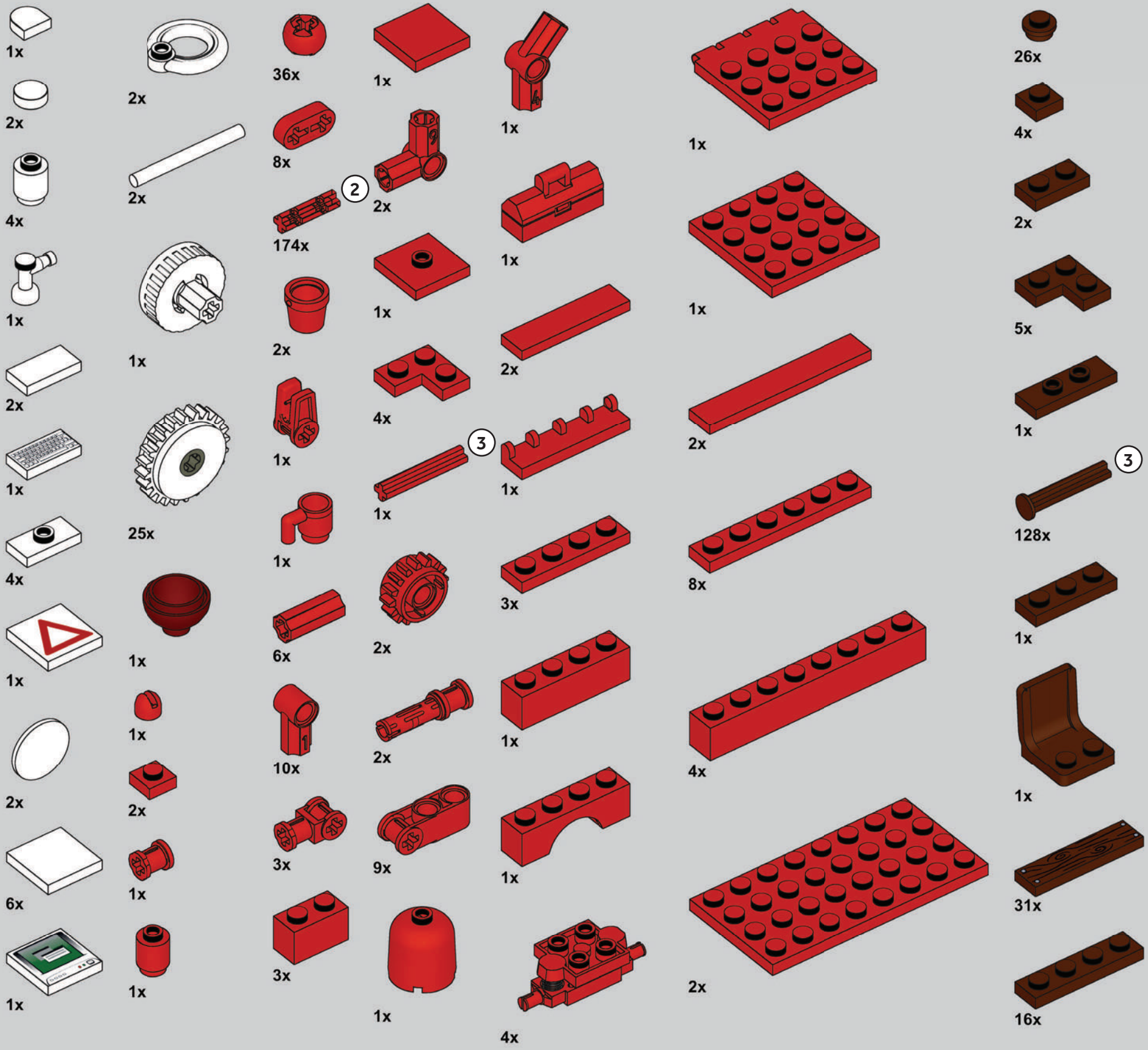
1x
2x
4x
1x
2x
1x
4x
1x
2x
6x
1x
2x
2x
1x
25x
1x
1x
2x
1x
1x
36x
8x
2
174x
2x
1x
1x
1x
6x
10x
3x
3x
1x
2x
1x
4x
3
1x
2x
2x
9x
1x
1x
1x
2x
1x
3x
1x
1x
4x
1x
1x
2x
8x
4x
2x
26x
4x
2x
5x
1x
3
128x
1x
1x
31x
16x


1x

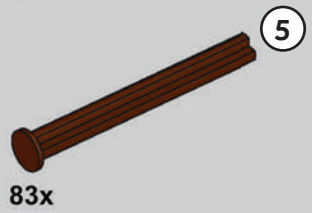
5
83x

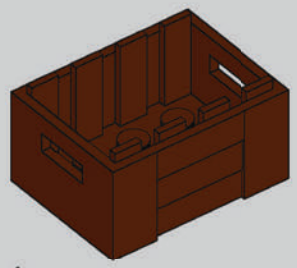
1x

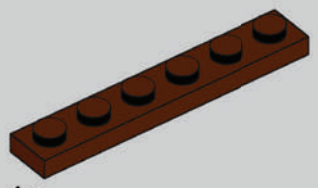
1x

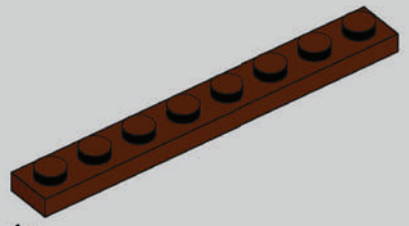
1x

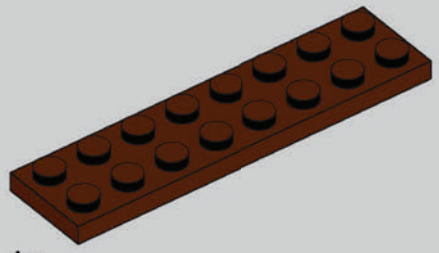
1x

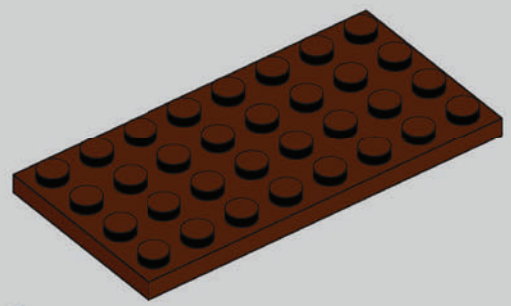
3x

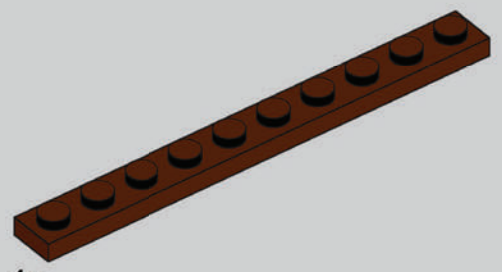
1x

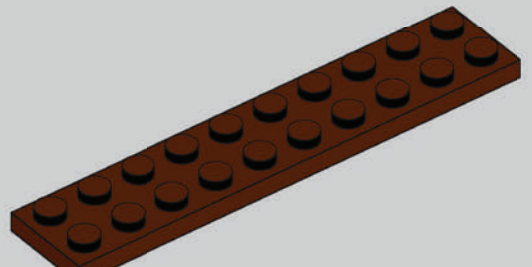
2x

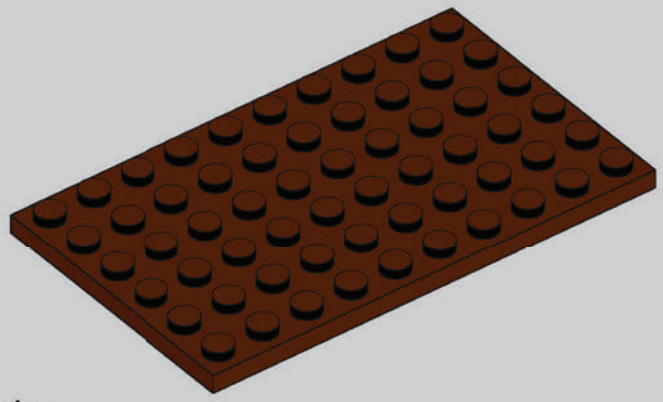
1x

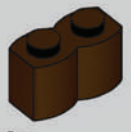
2x


70x

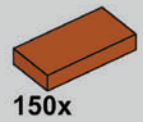
150x

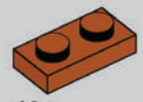
40x


41x

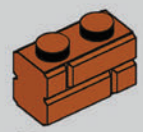
19x

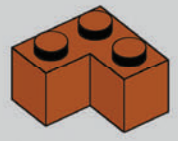
6x

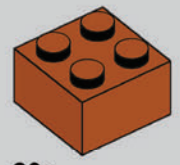
20x

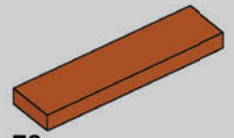
78x

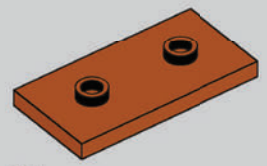
2x

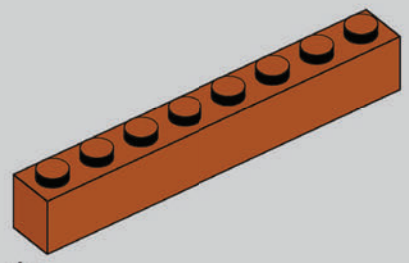
1x


1x


3x


1x


1x


2x


1x

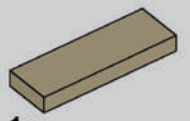
1x


2x

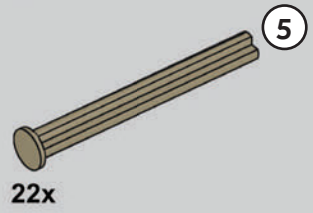
5
22x

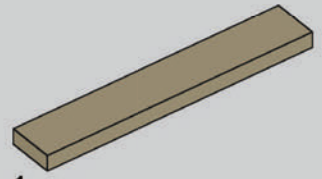
1x

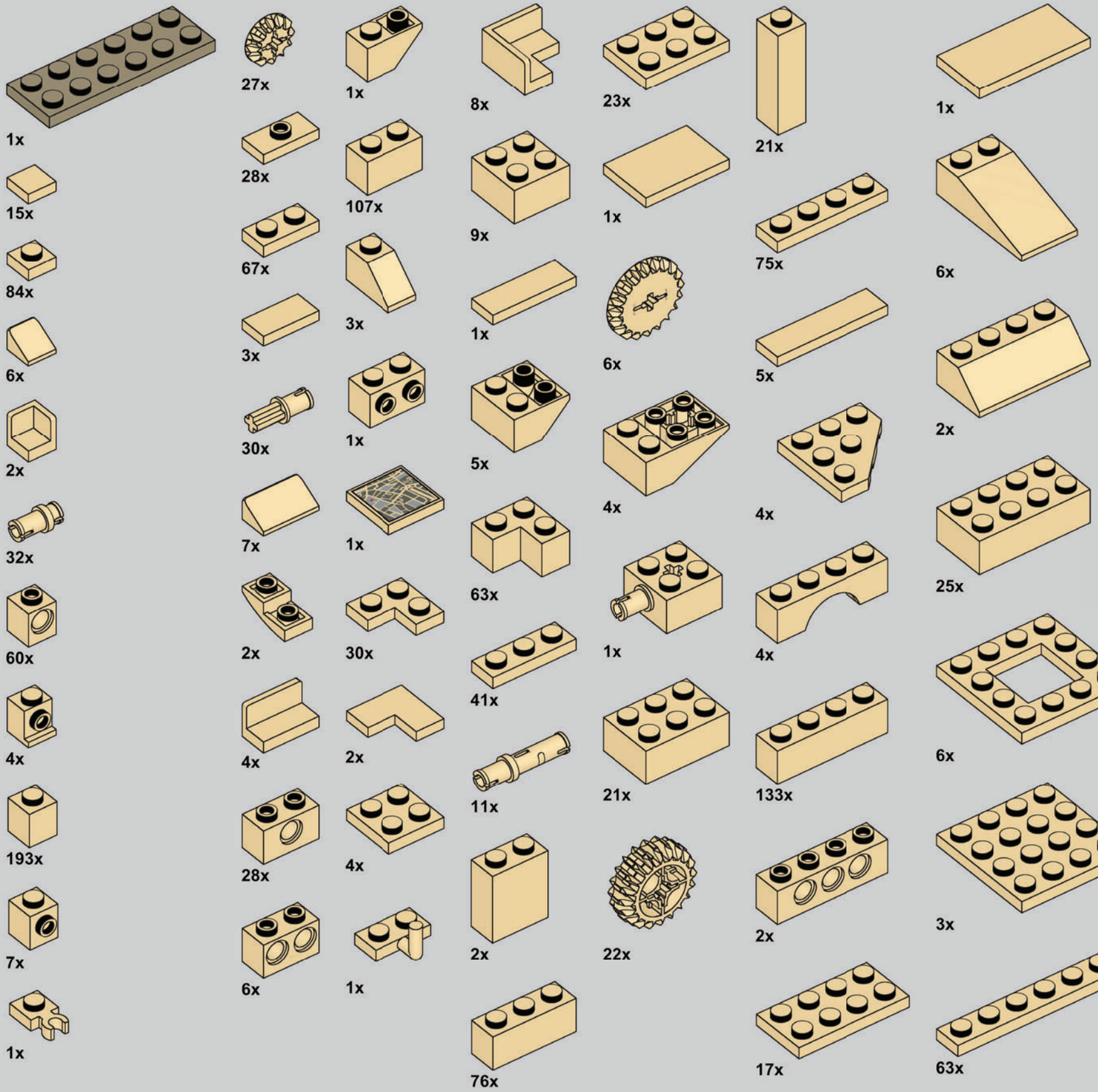
1x
15x
84x
6x
2x
32x
60x
4x
193x
7x
1x
27x
28x
67x
3x
30x
7x
2x
4x
28x
6x
1x
107x
3x
1x
1x
30x
2x
4x
1x
8x
9x
1x
5x
63x
41x
11x
2x
76x
23x
1x
6x
4x
1x
21x
75x
5x
4x
4x
133x
2x
17x
1x
6x
2x
25x
6x
3x
63x

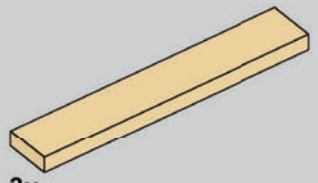
3x

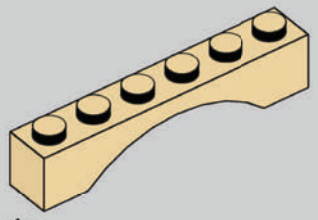
1x

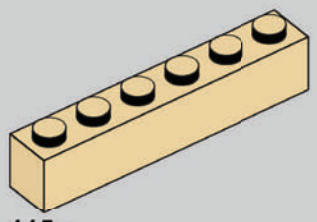
115x

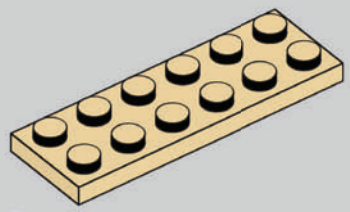
7x

1x

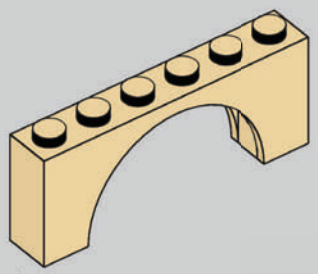
1x

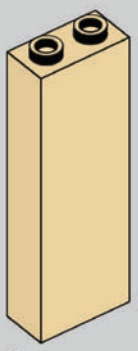
2x

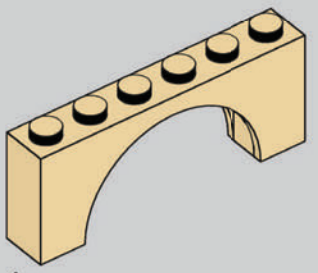
4x

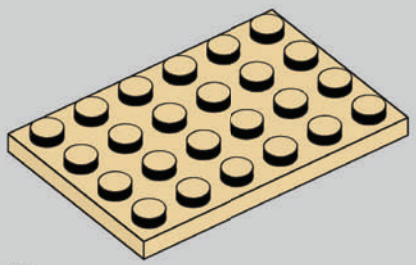
4x

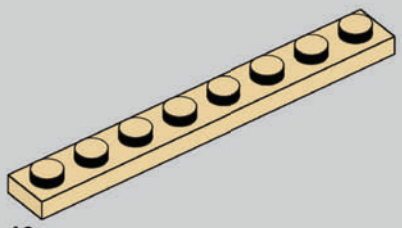
40x

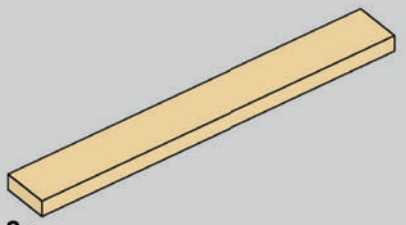
2x

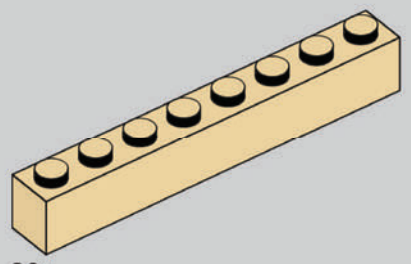
86x

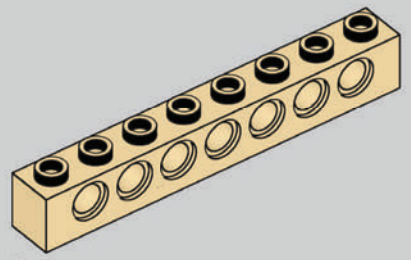
8x

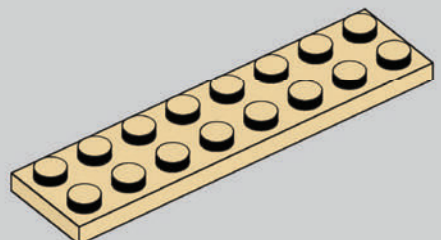
4x

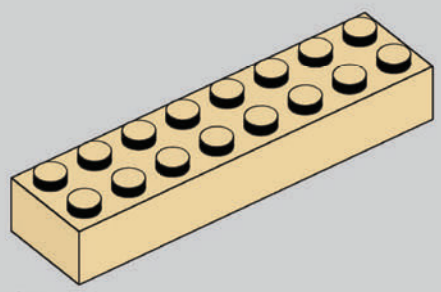
1x

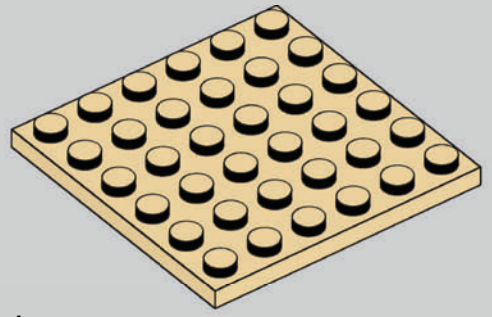
1x

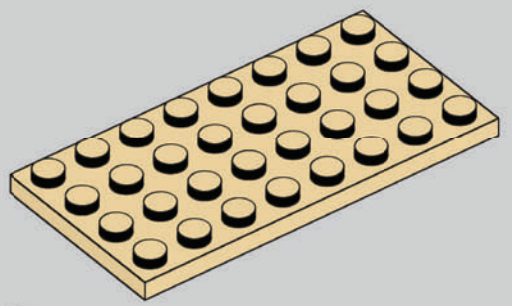
3x

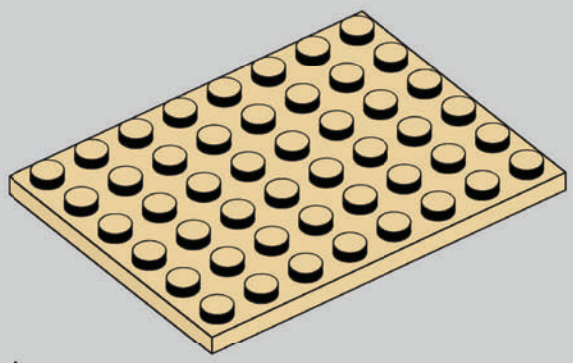
1x

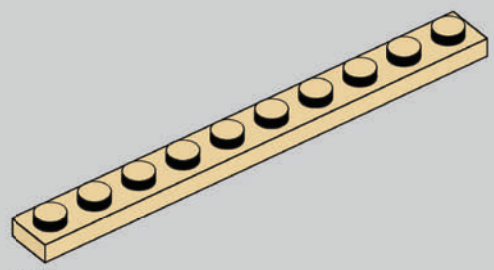
30x

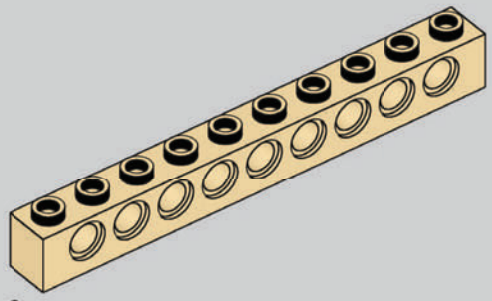
2x

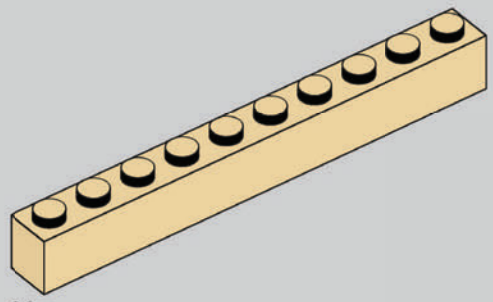
20x

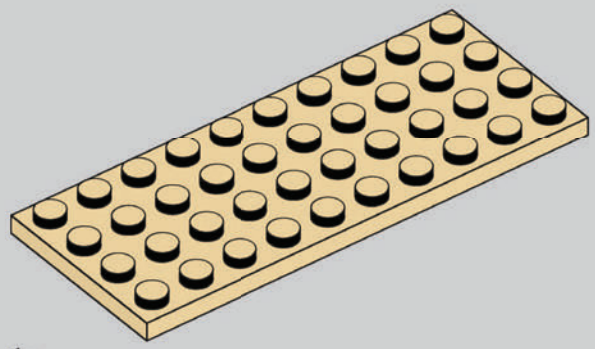
1x

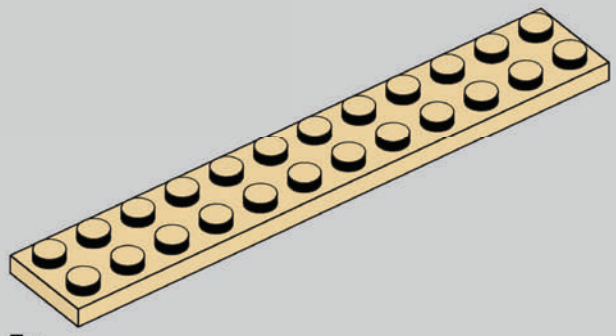
7x

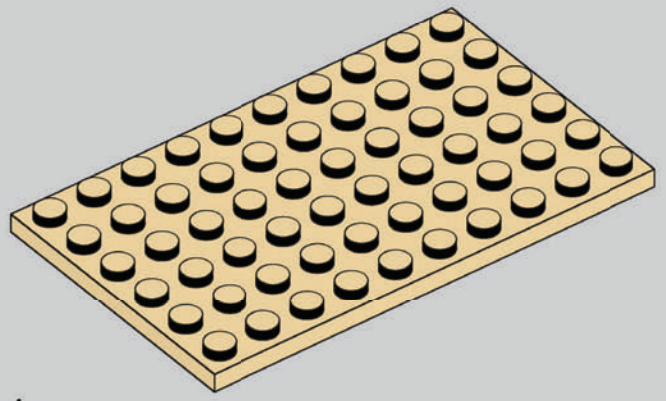
4x

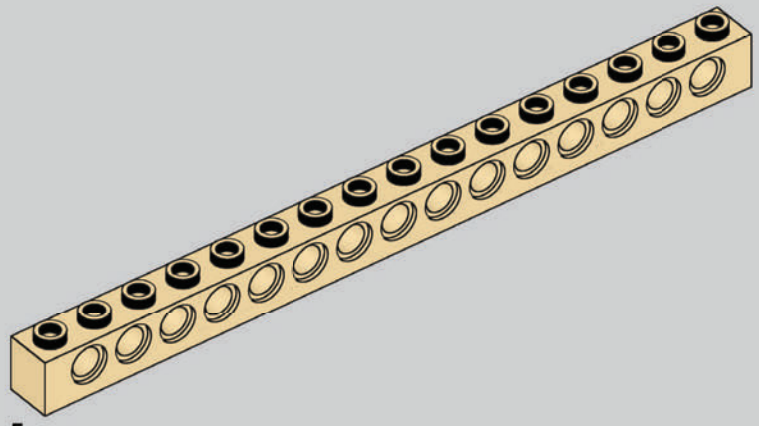
5x

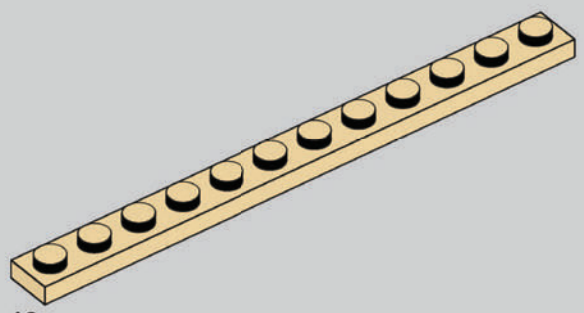
13x

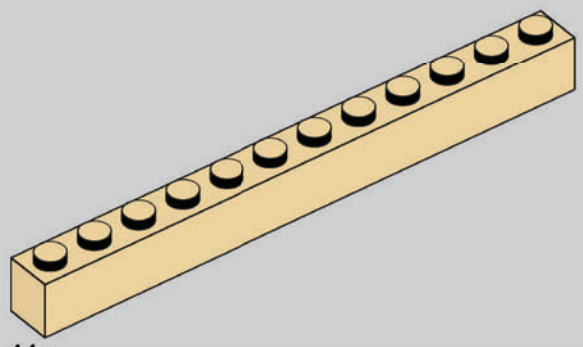
11x

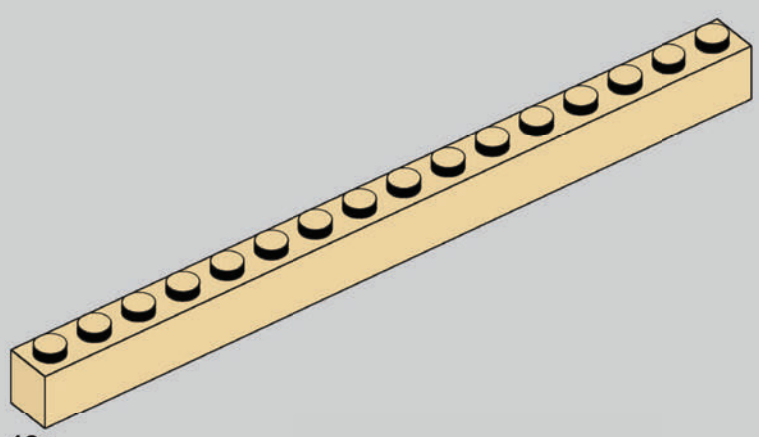
12x


2x


82x


26x


160x


119x


8x


5x


118x


5x


233x


2x


9x


16x


20x


2x


48x


2x


7x


1x


6x


3x


18x


110x

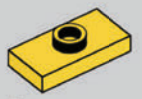
5x

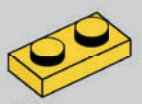
185x


2x


49x


4x


8x


32x


170x


8x


144x

164x

2x

51x

10x

4x

36x

12x

29x

13x

5x

1x

6x

1x

1x

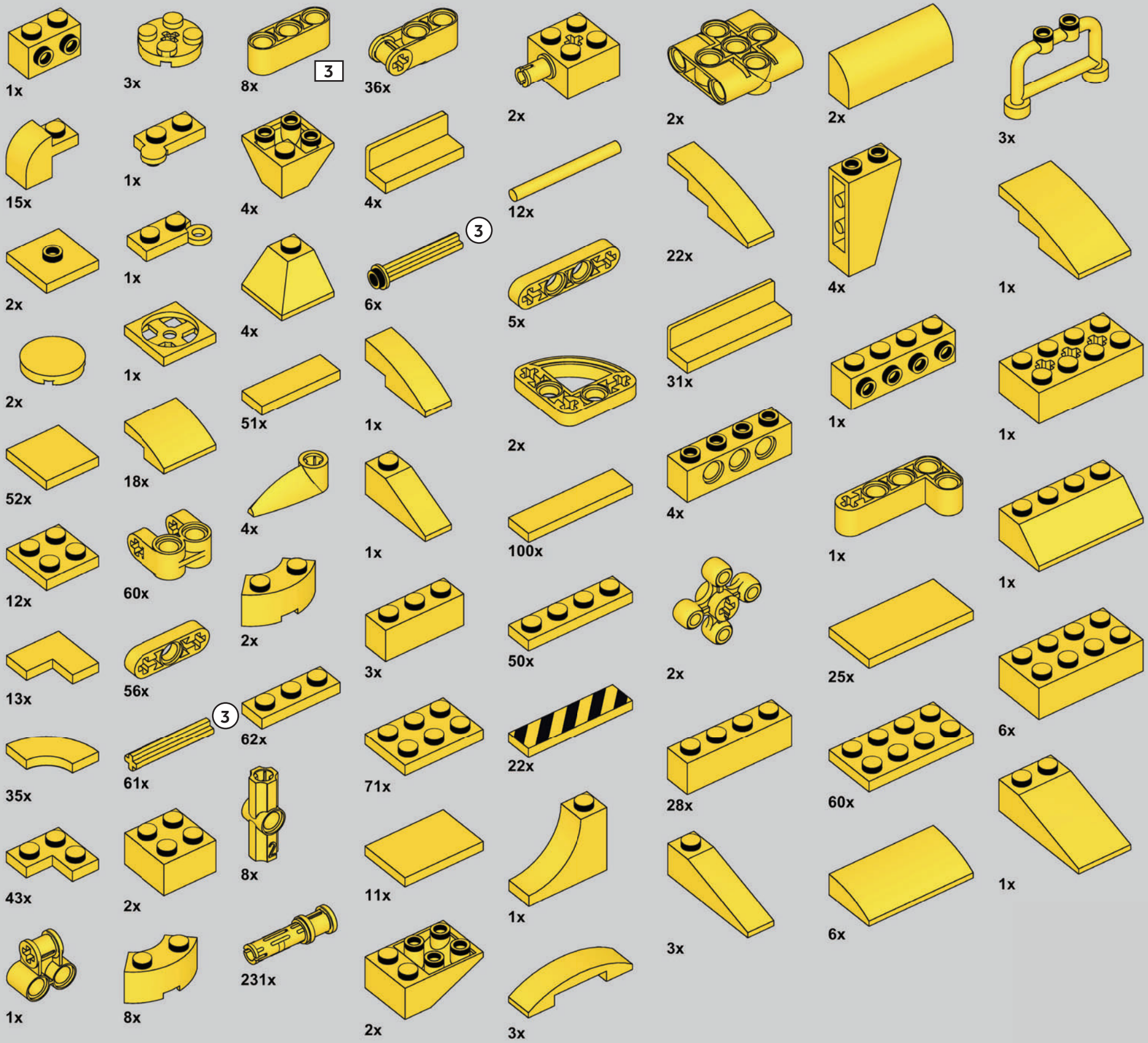
1x
3x
8x
3
36x
2x
2x
2x
3x
15x
1x
4x
4x
12x
22x
4x
1x
2x
1x
4x
3
6x
5x
1x
2x
1x
2x
51x
1x
31x
1x
1x
52x
18x
4x
1x
2x
4x
1x
1x
12x
60x
2x
3x
50x
2x
25x
13x
56x
3
62x
71x
22x
28x
60x
6x
35x
61x
8x
11x
1x
3x
6x
1x
43x
2x
231x
2x
3x
1x
8x

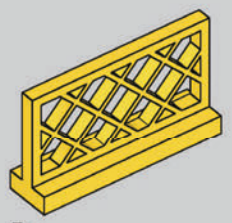
5x

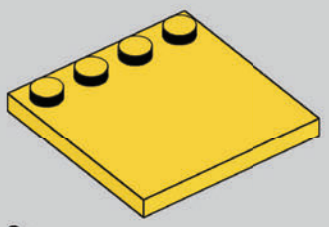
2x

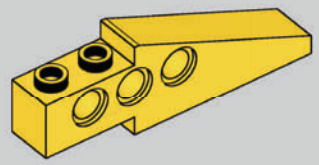
1x

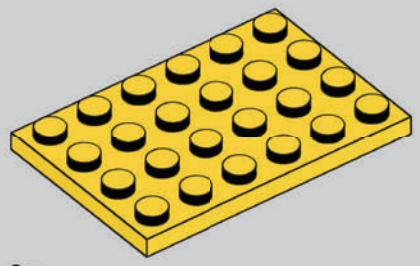
3x

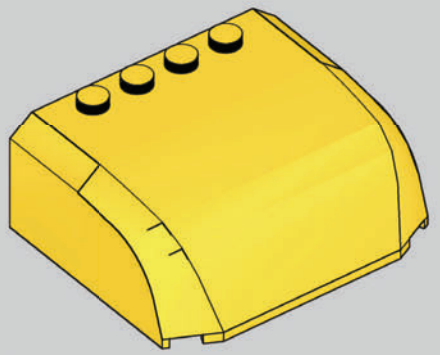
8x

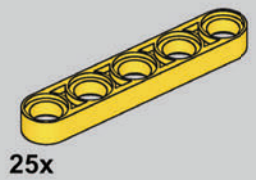
25x

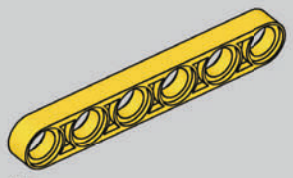
4x

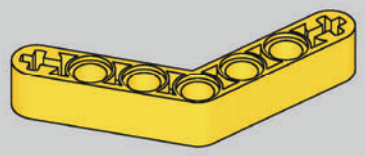
4x


1x

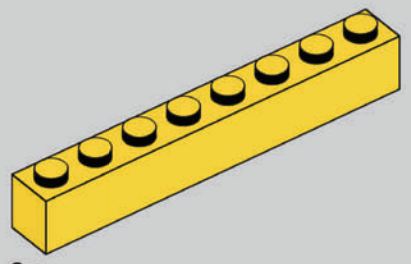
2x

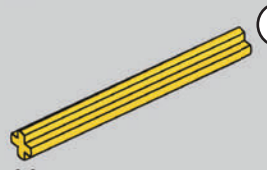
11x

5

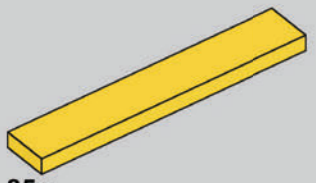
85x

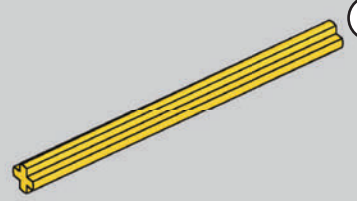
55x

7

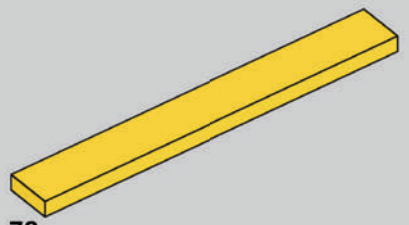
72x

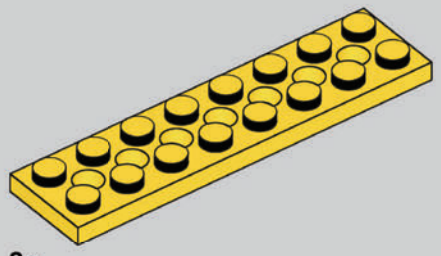
2x

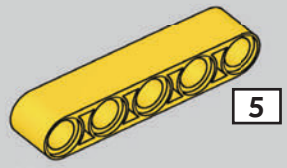
38x

5

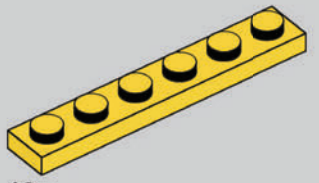
12x

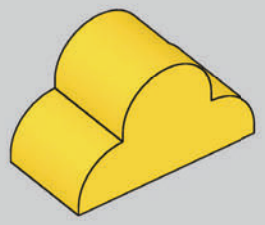
4x

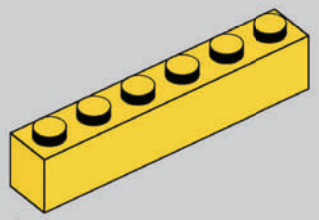
3x

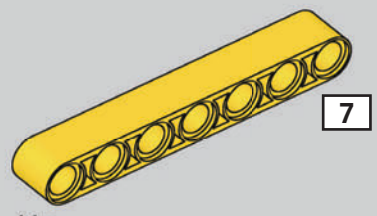
41x

7

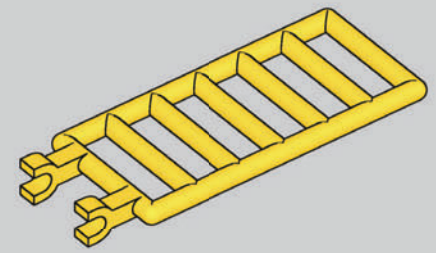
3x

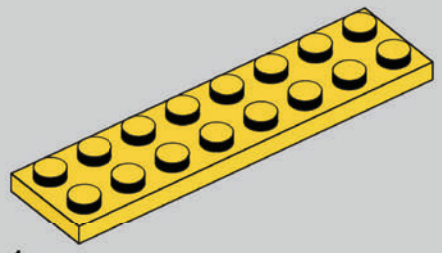
1x

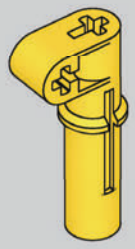
1x

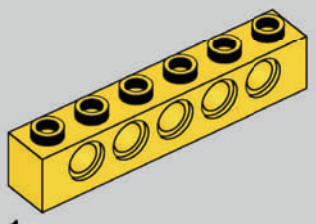
1x

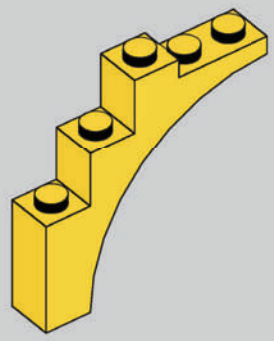
1x

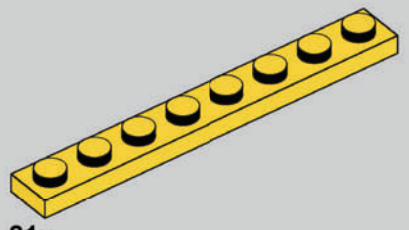
21x

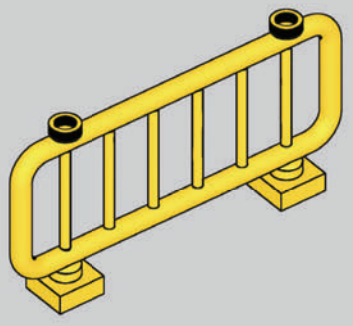
14x


15x

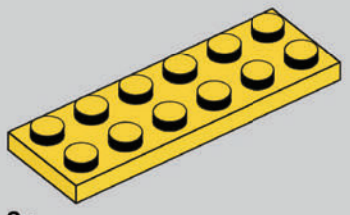
2x

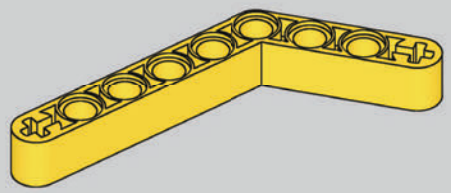

1x

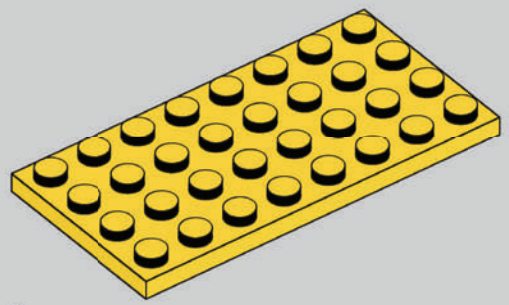

1x

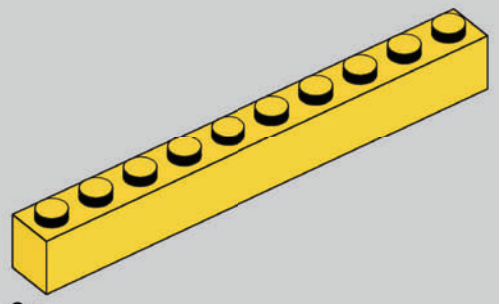

2x

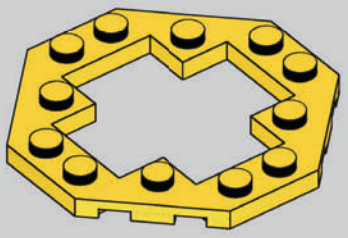

2x

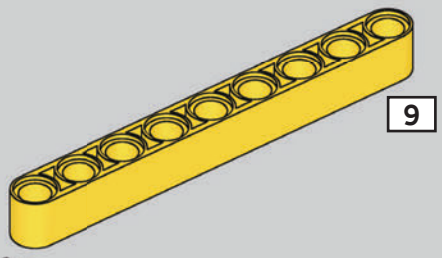

9

6x

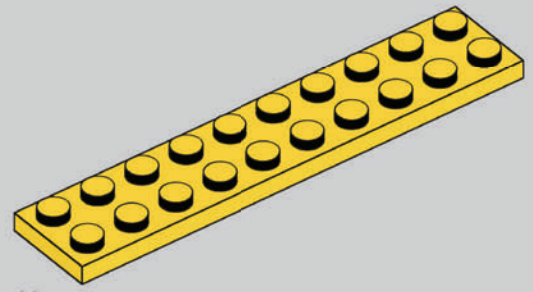

13x

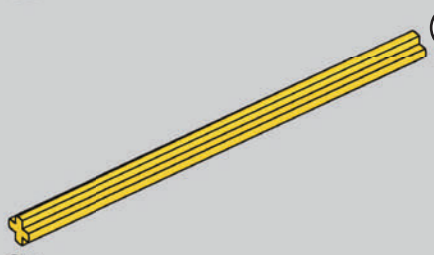

9

2x

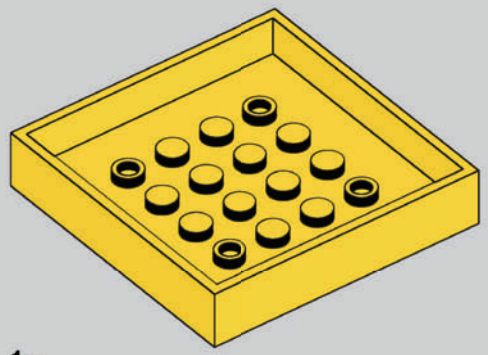

1x

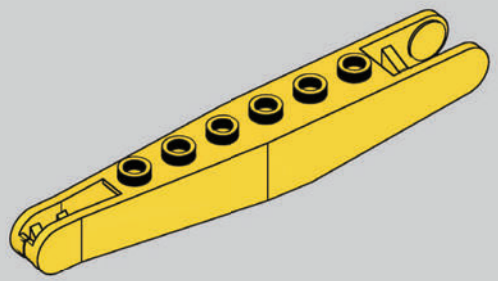

1x

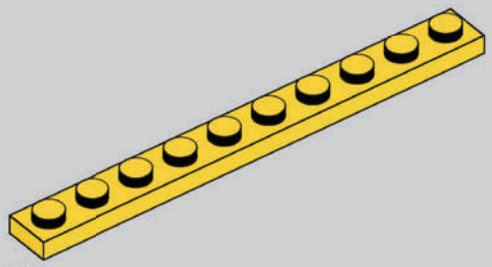

26x

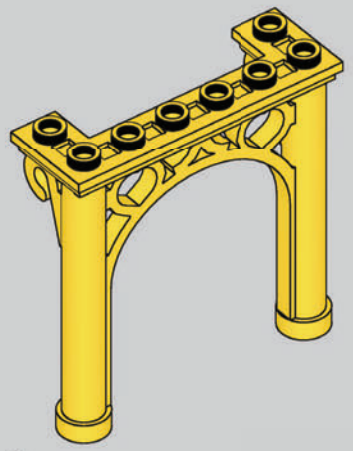

1x

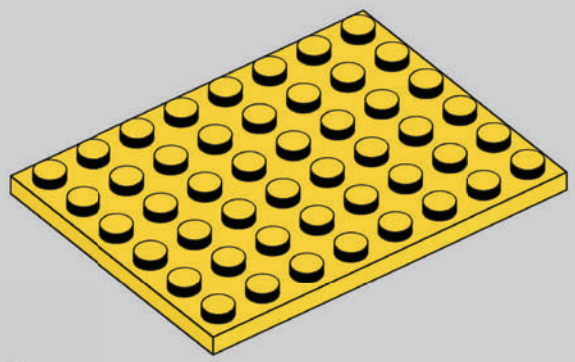

2x

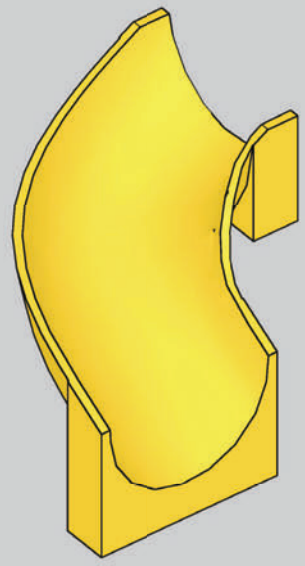

1x

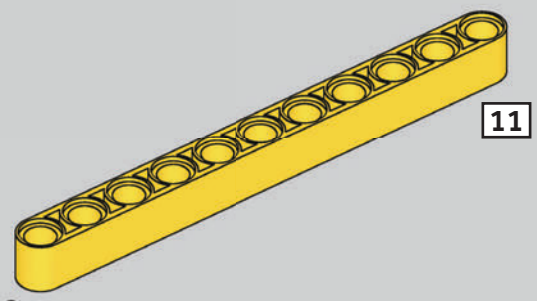

8x

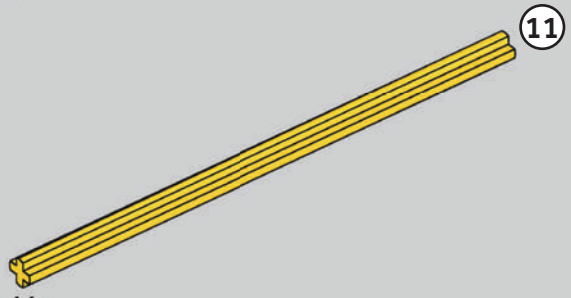

11x

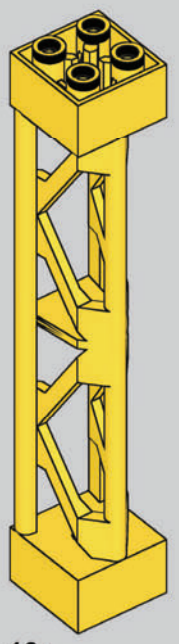

16x

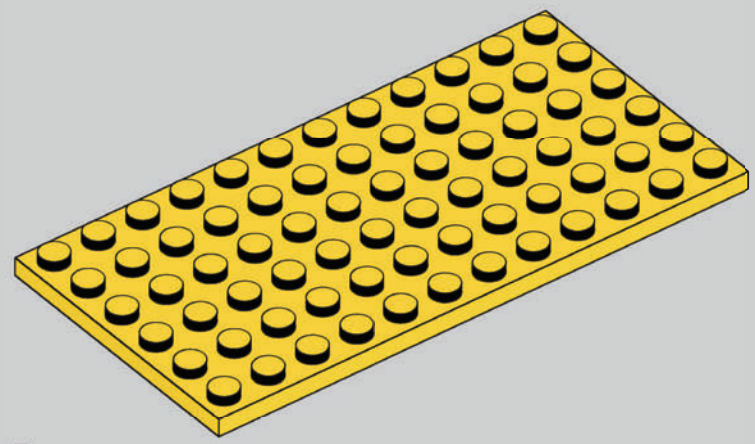

7x

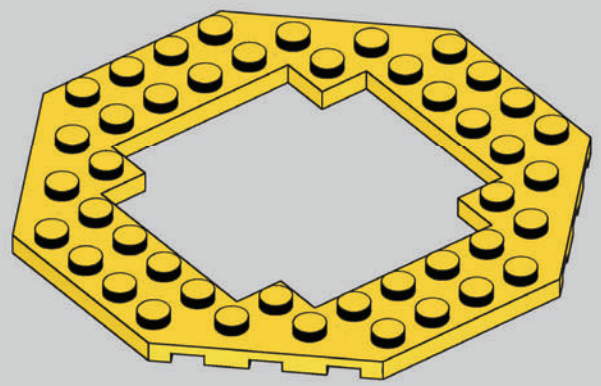

1x

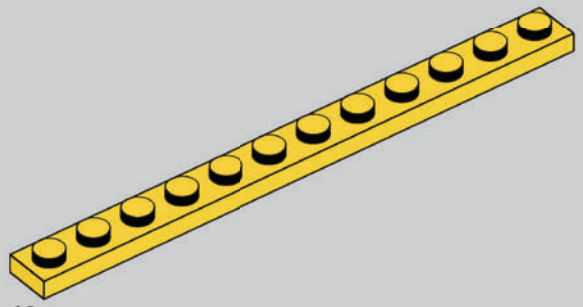

43x

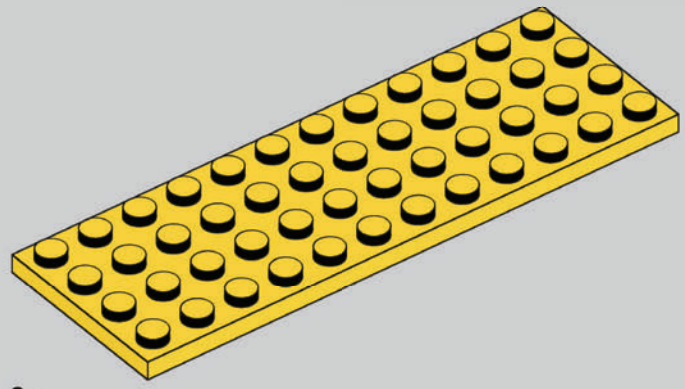

2x

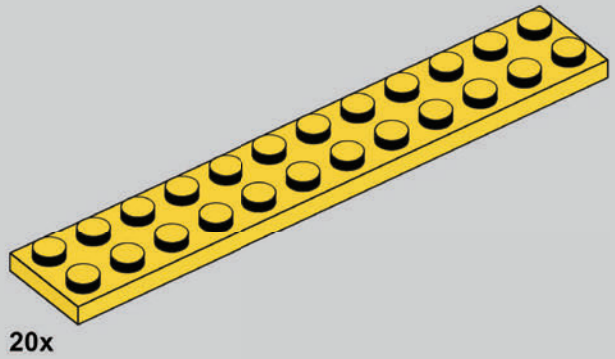

20x

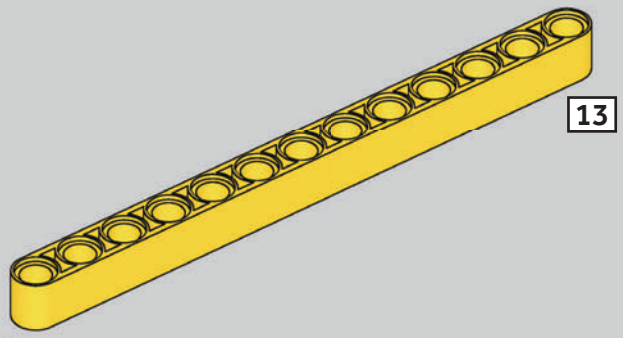

2x

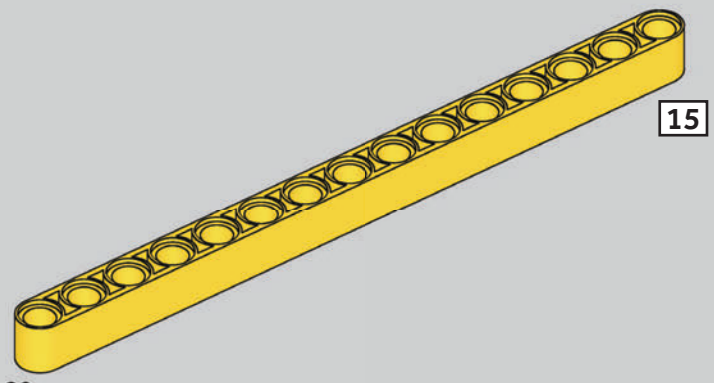

29x

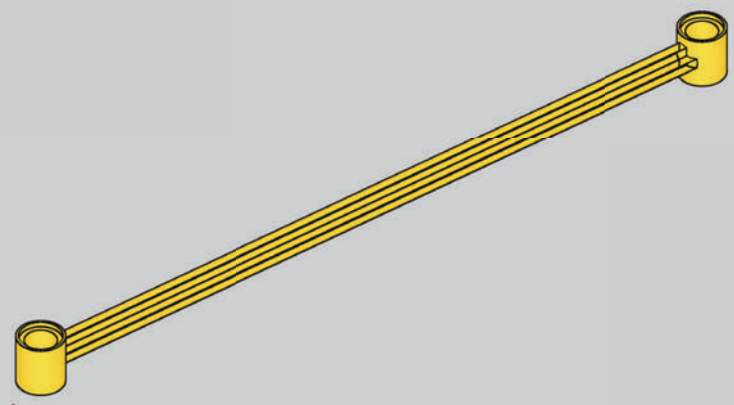

1x

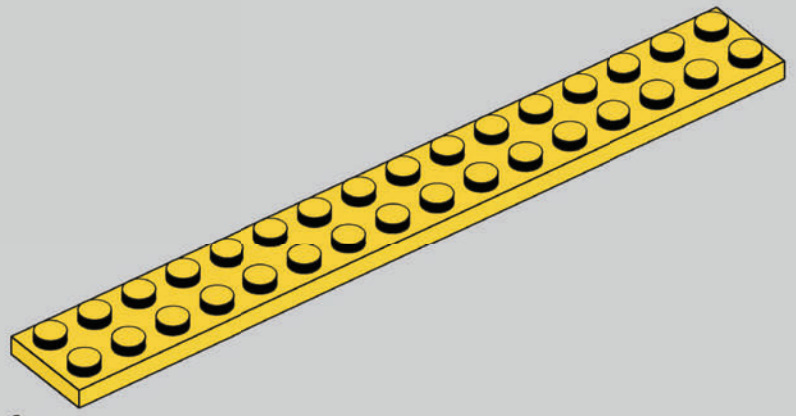

2x

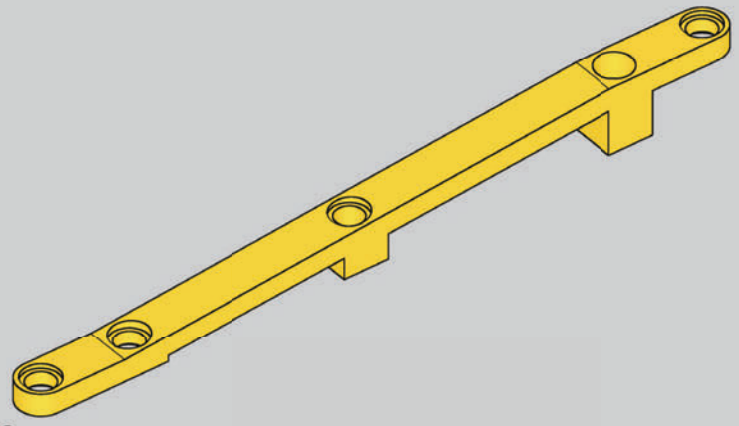

2x

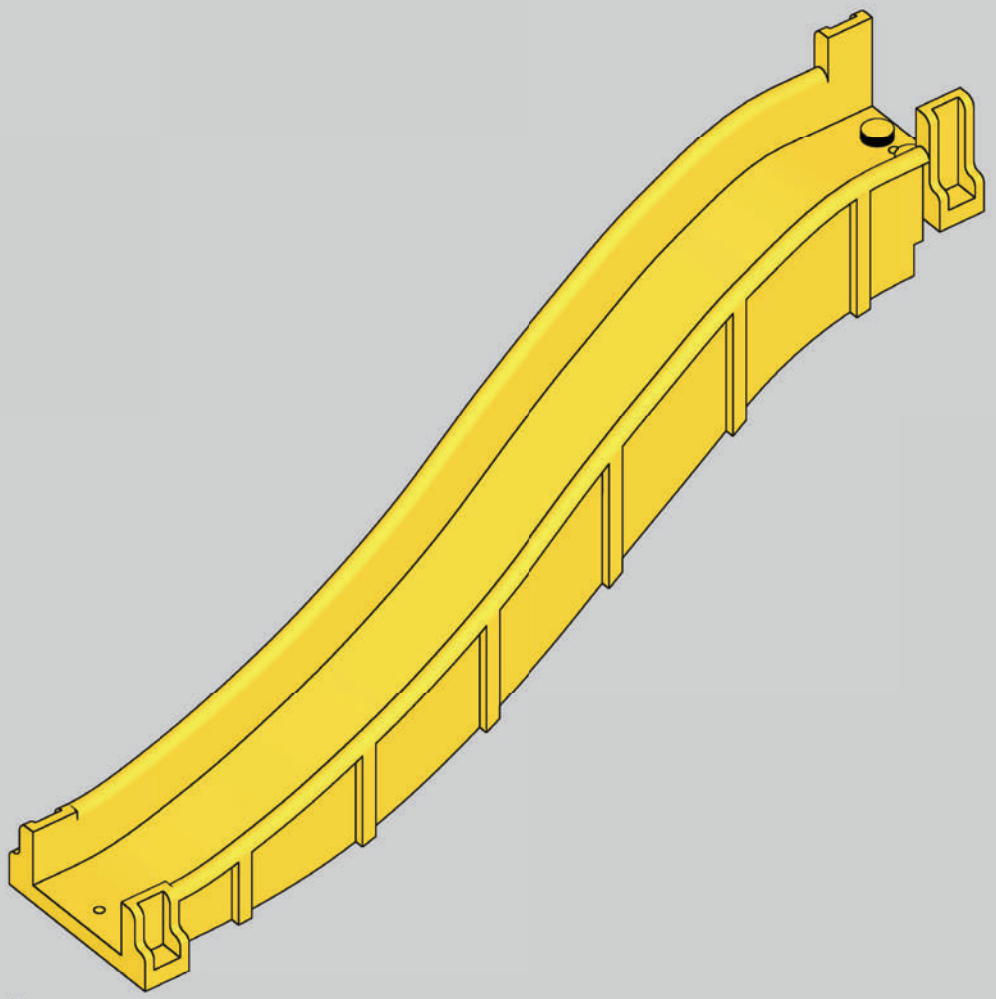

1x



4x

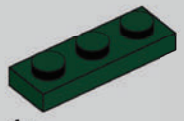

4x



1x



8x

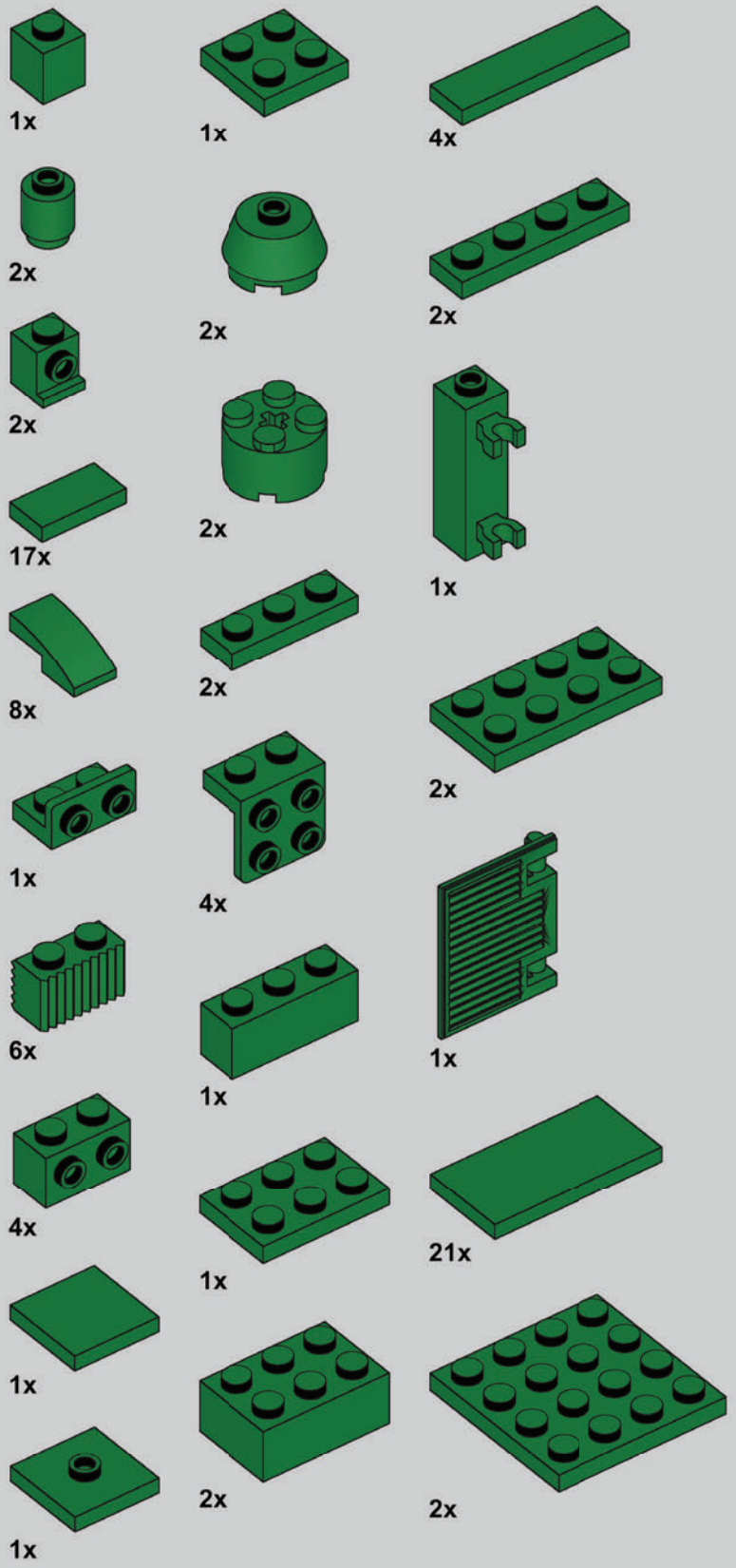
1x
1x
4x
2x
2x
2x
2x
2x
17x
2x
1x
8x
2x
2x
1x
4x
6x
1x
1x
1x
4x
21x
1x
1x
2x
2x

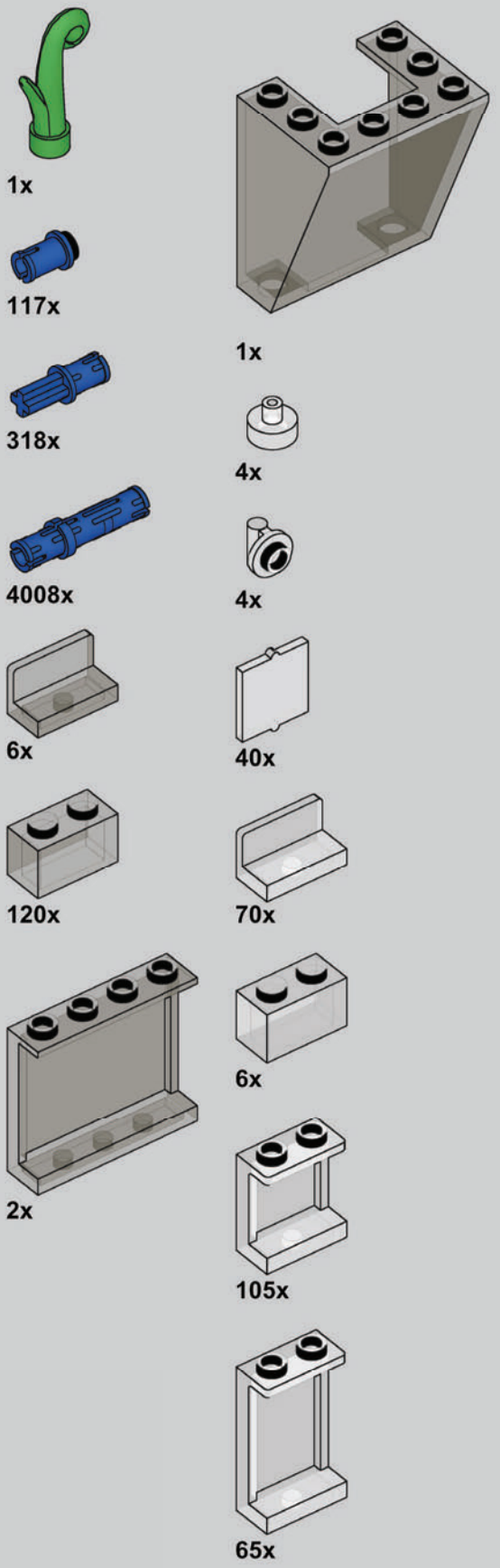
1x
117x
318x
4008x
6x
120x
2x
1x
4x
4x
40x
70x
6x
105x
65x

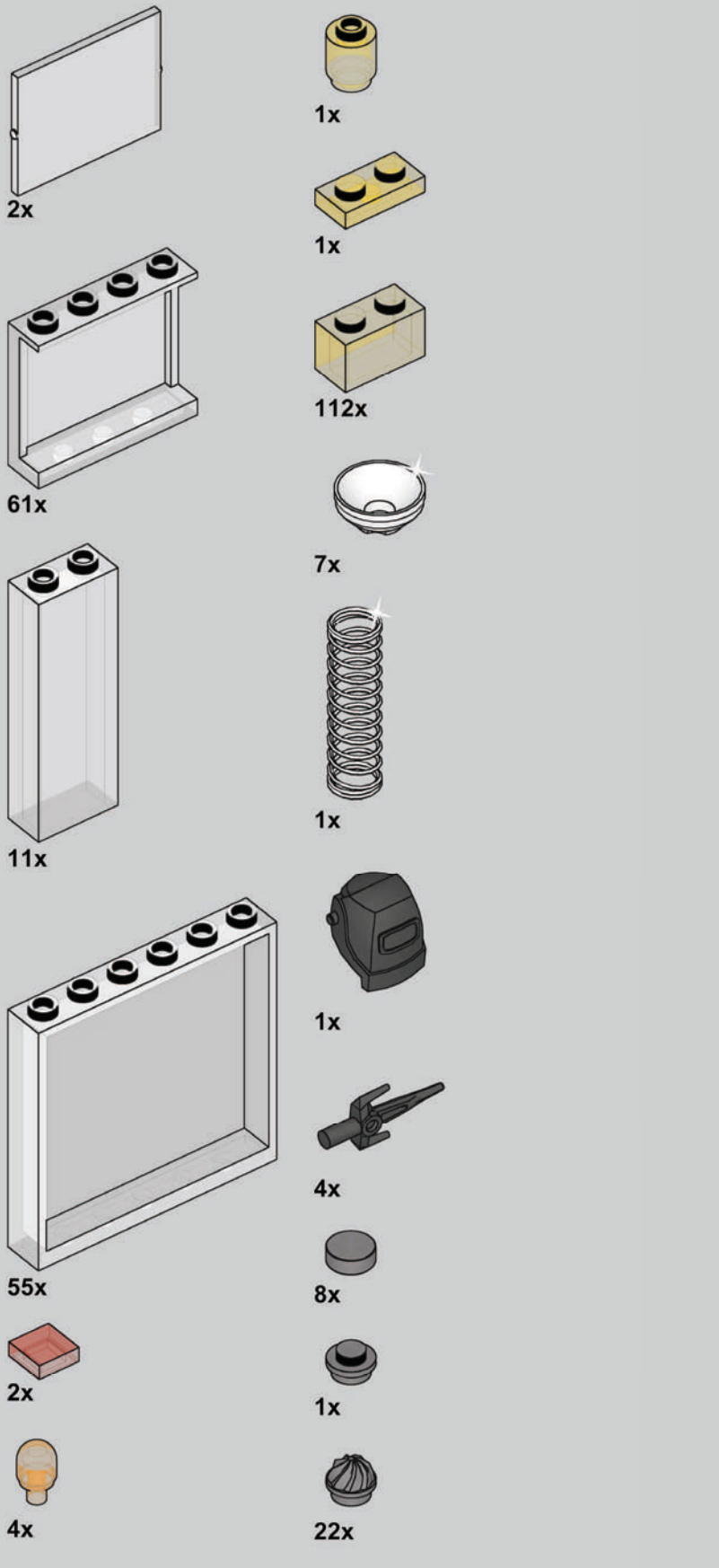
2x
61x
11x
55x
2x
4x
1x
1x
112x
7x
1x
1x
4x
8x
1x
22x

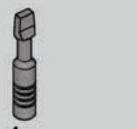

1x

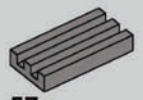

57x



1x



1x



1x

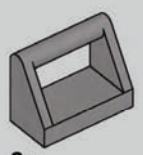

6x

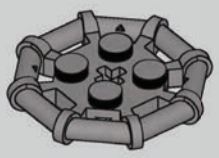

2x

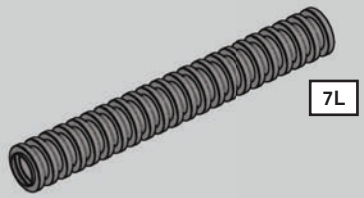

1x

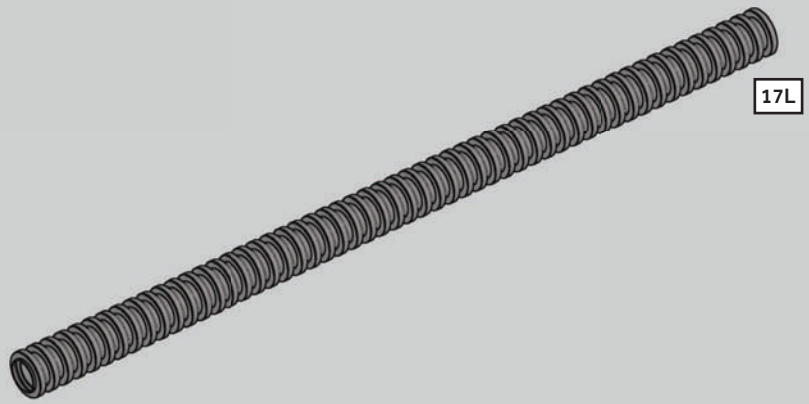

6x

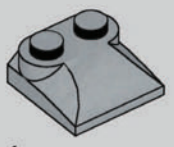

1x

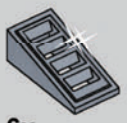

6x

Parts not pictured:

4x	Rubber Belt Small (x71, white)
1x	Rubber Belt Medium (x37, red)
1x	String, Cord Thin 50cm (x77ac50, black)
1x	Hose, Pneumatic 4mm D. 4L / 3.2cm (5102c04, black)
39x	Long extension cable (58118)
14x	Short extension cable (60656)
1x	Wire with brick 2 x 2 x 2/3 pair, 15 studs long (5306bc015)

LEGO® is a trademark of the LEGO Group of companies which does not sponsor, authorize or endorse these instructions.

Modules inspired by the work of Akiyuki Kawaguchi (akiyuki.jp), JK Brickworks (jkbrickworks.com), FernandoQ, Dunes, Staffan Ihl, and Matt Norman (greatballpit.com) - Copyright © 2021

Great Ball Contraption Tower II,
Copyright © 2021 Diego Baca
www.gbctower.com

Great Ball Contraption Tower II

The Great Ball Contraption Tower II is the larger sequel to the original GBC Tower from 2019. The tower uses eight Akiyuki modules distributed vertically across two parallel 7-foot structural frames. The tower also uses several additional modules and techniques from many GBC builders from across the globe – an homage to the creativity of the GBC community. The result is a giant MOC with more than 45,000 LEGO® bricks!

LEGO® is a trademark of the LEGO Group of companies which does not sponsor, authorize or endorse these instructions.

Modules inspired by the work of Akiyuki Kawaguchi (akiyuki.jp), JK Brickworks (jkbrickworks.com), FernandoQ, Dunes, Staffan Ihl, and Matt Norman (greatballpit.com) - Copyright © 2021

Great Ball Contraption Tower,
Copyright © 2021 Diego Baca
www.gbctower.com